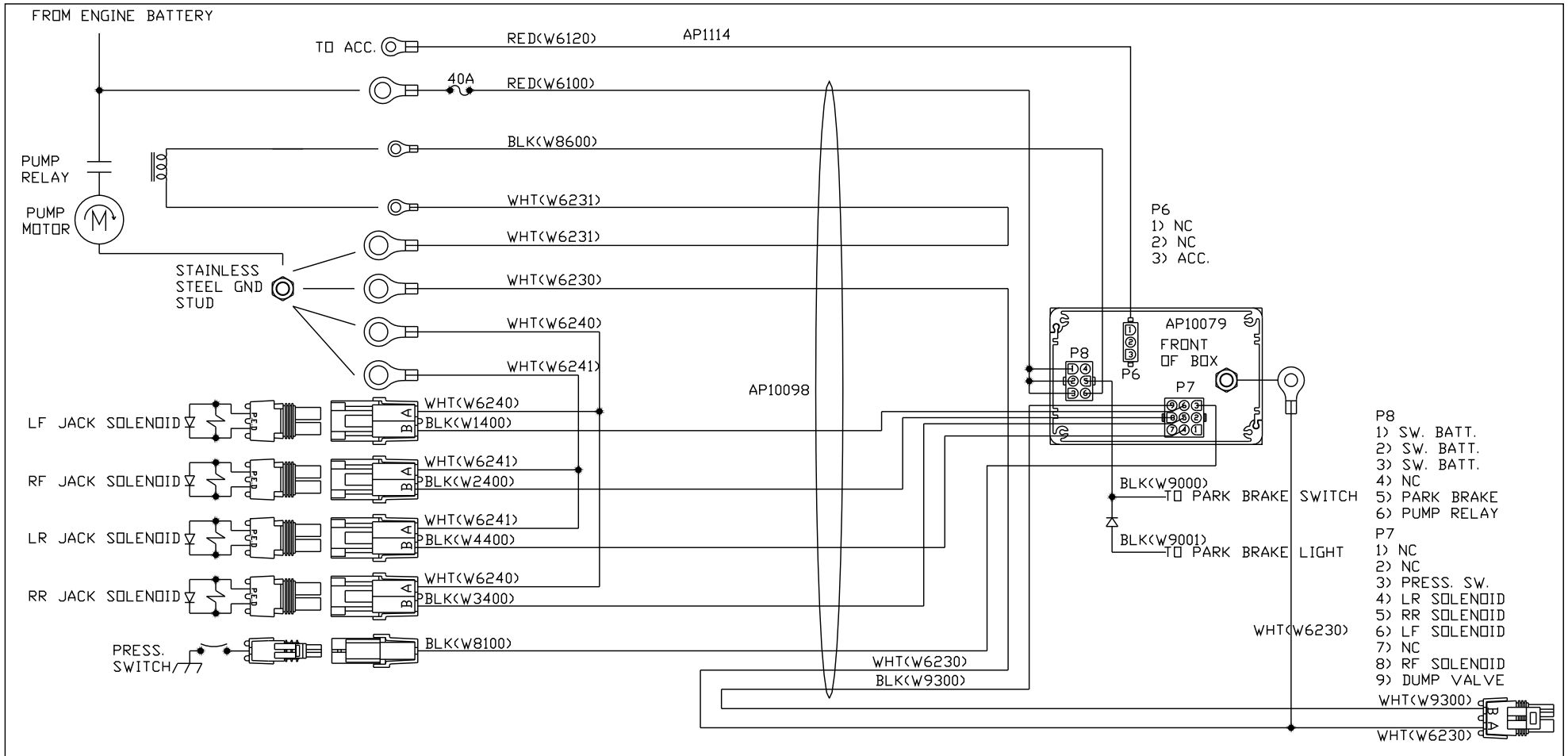

NO.	DATE	REVISION

THE INFORMATION DISCLOSED ON THIS DRAWING IS CONFIDENTIAL AND MUST NOT BE DISCLOSED OR USED IN ANY MANNER WHICH WILL BE DETRIMENTAL TO THE HWH CORPORATION

HWH

I-80 EXIT 267 SOUTH
RT 1 MOSCOW, IOWA 52760

SCALE 1:2 | DATE 18OCT01 | DRAWN BY .

SYSTEM SCHEMATIC ELEC

DRAWING NUMBER
MP88718 A/B

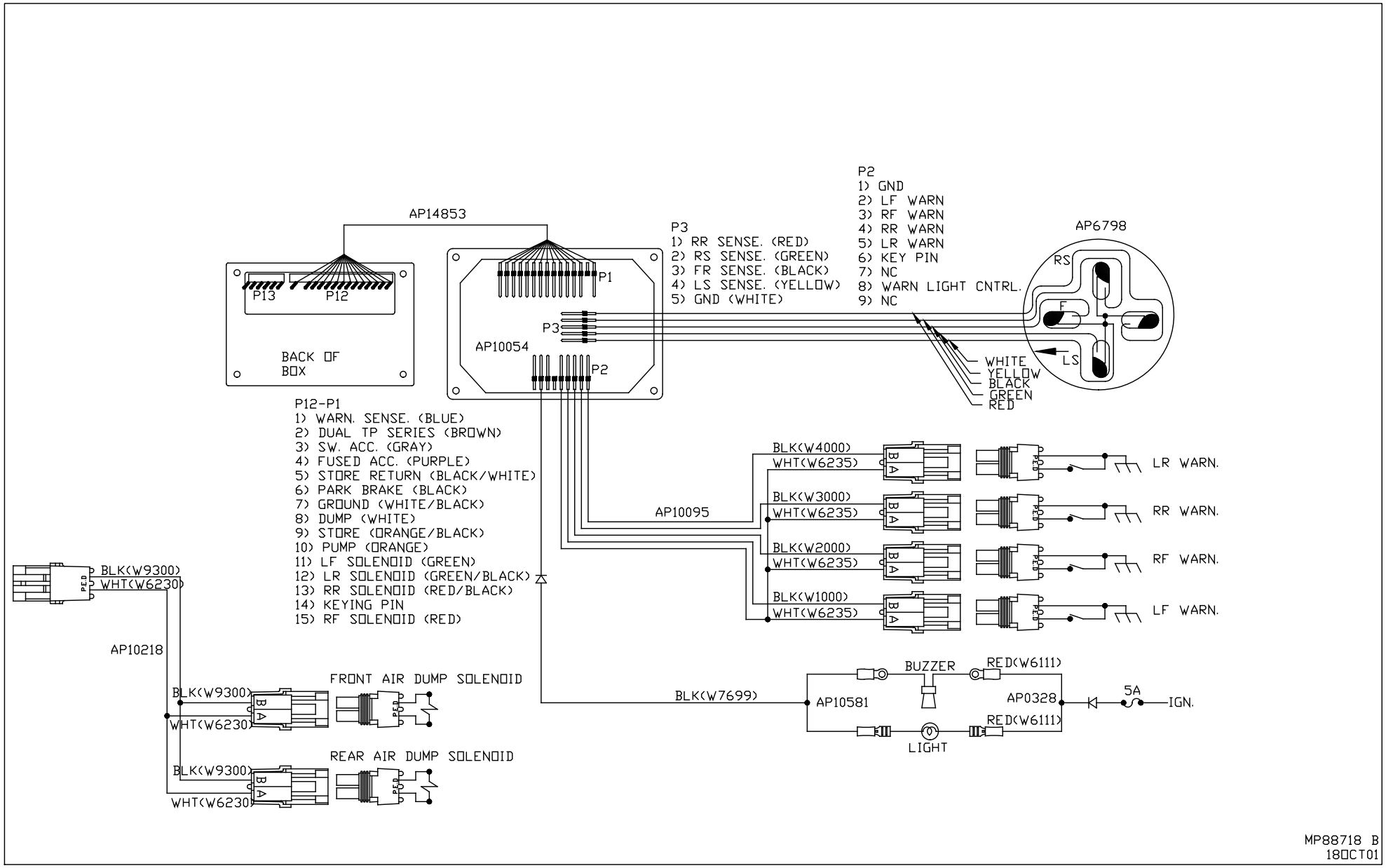
AP14853
P13
P12
BACK OF BOX
P1
P3
AP10054
P2
P3
1) RR SENSE. (RED)
2) RS SENSE. (GREEN)
3) FR SENSE. (BLACK)
4) LS SENSE. (YELLOW)
5) GND (WHITE)
P2
1) GND
2) LF WARN
3) RF WARN
4) RR WARN
5) LR WARN
6) KEY PIN
7) NC
8) WARN LIGHT CNTRL.
9) NC
AP6798
RS
F
LS
WHITE
YELLOW
BLACK
GREEN
RED
P12-P1
1) WARN. SENSE. (BLUE)
2) DUAL TP SERIES (BROWN)
3) SW. ACC. (GRAY)
4) FUSED ACC. (PURPLE)
5) STORE RETURN (BLACK/WHITE)
6) PARK BRAKE (BLACK)
7) GROUND (WHITE/BLACK)
8) DUMP (WHITE)
9) STORE (ORANGE/BLACK)
10) PUMP (ORANGE)
11) LF SOLENOID (GREEN)
12) LR SOLENOID (GREEN/BLACK)
13) RR SOLENOID (RED/BLACK)
14) KEYING PIN
15) RF SOLENOID (RED)
AP10095
BLK(W4000)
WHT(W6235)
BLK(W3000)
WHT(W6235)
BLK(W2000)
WHT(W6235)
BLK(W1000)
WHT(W6235)
LR WARN.
RR WARN.
RF WARN.
LF WARN.
BLK(W9300)
WHT(W6230)
AP10218
FRONT AIR DUMP SOLENOID
REAR AIR DUMP SOLENOID
BLK(W7699)
AP10581
BUZZER
LIGHT
RED(W6111)
RED(W6111)
AP0328
5A
IGN.
MP88718 B
18OCT01