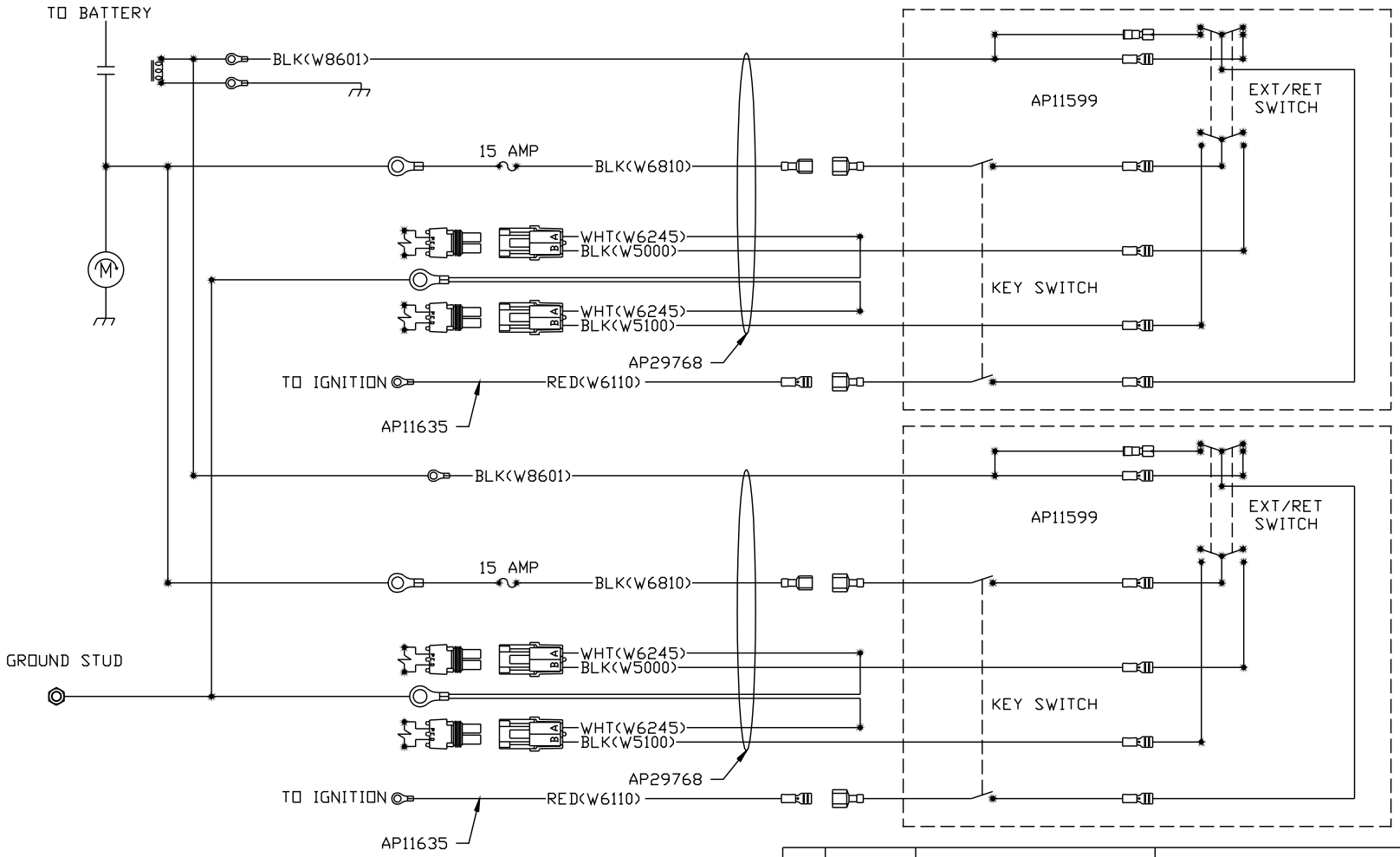

NO.	DATE	REVISION

THE INFORMATION DISCLOSED ON THIS DRAWING IS CONFIDENTIAL AND MUST NOT BE DISCLOSED OR USED IN ANY MANNER WHICH WILL BE DETRIMENTAL TO THE HWH CORPORATION

HWH

I-80 EXIT 267 SOUTH
RT 1 MOSCOW, IOWA 52760

SCALE 1:3 | DATE 18DEC02 | DRAWN BY .

SYSTEM SCHEMATIC ELEC

DRAWING NUMBER
MP889740