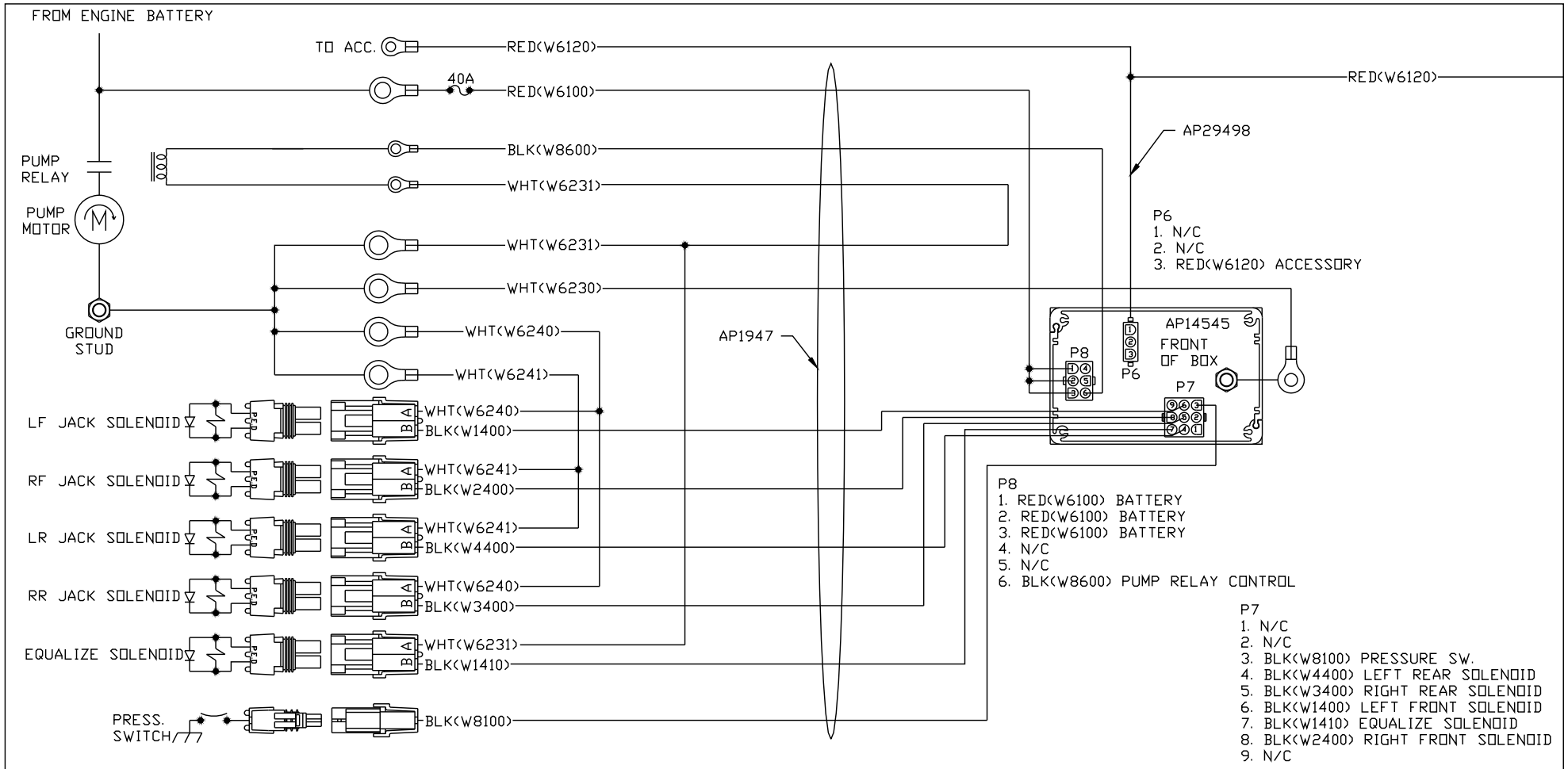

NO.	DATE	REVISION

THE INFORMATION DISCLOSED ON THIS DRAWING IS CONFIDENTIAL AND MUST NOT BE DISCLOSED OR USED IN ANY MANNER WHICH WILL BE DETRIMENTAL TO THE HWH CORPORATION

HWH

I-80 EXIT 267 SOUTH
RT 1 MOSCOW, IOWA 52760

SCALE 1:2 | DATE 20NOV03 | DRAWN BY .

SYSTEM SCHEMATIC ELEC

DRAWING NUMBER
MP89161 A/B

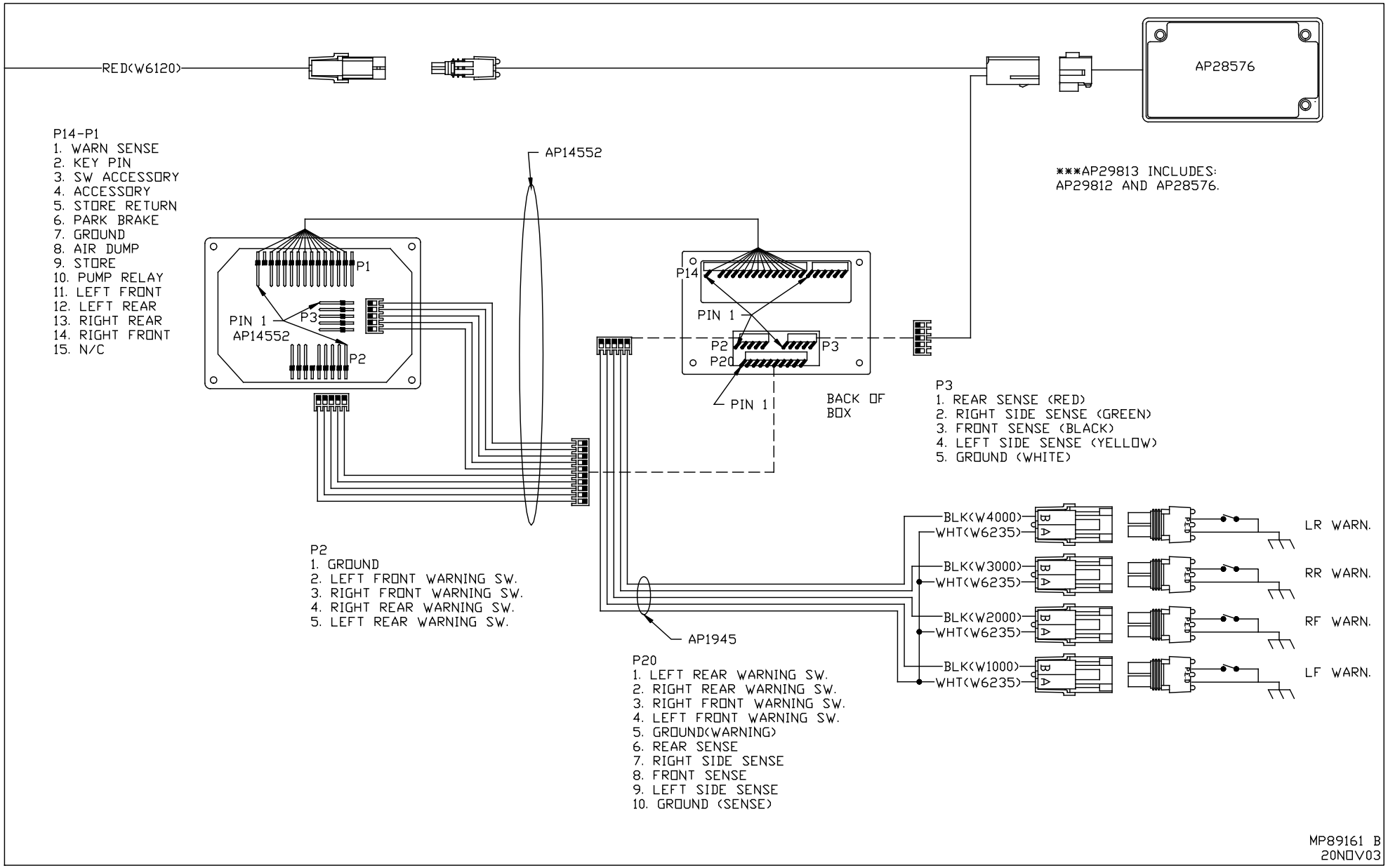
RED(W6120)
AP28576
P14-P1
1. WARN SENSE
2. KEY PIN
3. SW ACCESSORY
4. ACCESSORY
5. STORE RETURN
6. PARK BRAKE
7. GROUND
8. AIR DUMP
9. STORE
10. PUMP RELAY
11. LEFT FRONT
12. LEFT REAR
13. RIGHT REAR
14. RIGHT FRONT
15. N/C
AP14552
***AP29813 INCLUDES:
AP29812 AND AP28576.
P1
PIN 1
P3
AP14552
P2
P14
PIN 1
P2
P3
P20
PIN 1
BACK OF
BOX
P3
1. REAR SENSE (RED)
2. RIGHT SIDE SENSE (GREEN)
3. FRONT SENSE (BLACK)
4. LEFT SIDE SENSE (YELLOW)
5. GROUND (WHITE)
BLK(W4000)
WHT(W6235)
BLK(W3000)
WHT(W6235)
BLK(W2000)
WHT(W6235)
BLK(W1000)
WHT(W6235)
B
A
LR WARN.
RR WARN.
RF WARN.
LF WARN.
P2
1. GROUND
2. LEFT FRONT WARNING SW.
3. RIGHT FRONT WARNING SW.
4. RIGHT REAR WARNING SW.
5. LEFT REAR WARNING SW.
AP1945
P20
1. LEFT REAR WARNING SW.
2. RIGHT REAR WARNING SW.
3. RIGHT FRONT WARNING SW.
4. LEFT FRONT WARNING SW.
5. GROUND(WARNING)
6. REAR SENSE
7. RIGHT SIDE SENSE
8. FRONT SENSE
9. LEFT SIDE SENSE
10. GROUND (SENSE)
MP89161 B
20NOV03