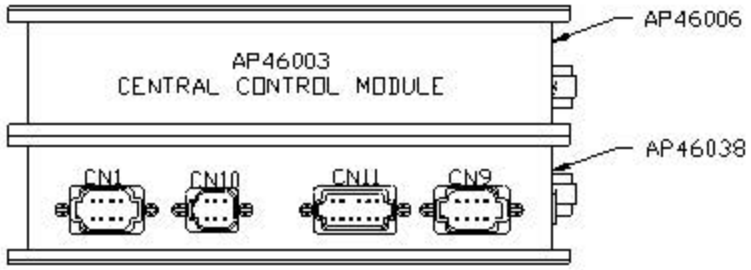

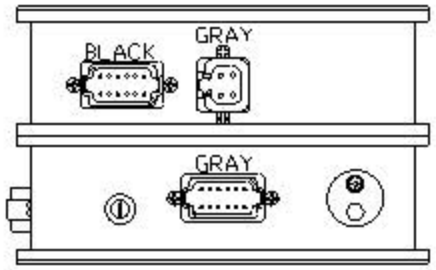

AP46006 (BLACK)
PIN
1 BLK(W1400) LEFT FRONT EXTEND
2 BLK(W1500) LEFT FRONT RETRACT
3 BLK(W2400) RIGHT FRONT EXTEND
4 BLK(W2500) RIGHT FRONT RETRACT
5 BLK(W4400) LEFT REAR EXTEND
6 BLK(W4500) LEFT REAR RETRACT
7 BLK(W3400) RIGHT REAR EXTEND
8 BLK(W3500) RIGHT REAR RETRACT
9 BLK(W9300) NOT USED
10 BLK(W9301) NOT USED
11 N/C
12 N/C

AP46006 (GRAY)
PIN
1 BLK(W6800) SWITCHED BATT
2 BLK(W6800) SWITCHED BATT
3 WHT(W6230) GROUND
4 WHT(W6230) GROUND

AP46038 (GRAY)
PIN
1 BLK(W1000) LEFT FRONT WARNING SW.
2 BLK(W2000) RIGHT FRONT WARNING SW.
3 BLK(W3000) RIGHT REAR WARNING SW.
4 BLK(W4000) LEFT REAR WARNING SW.
5 N/C
6 WHT(W6235) GROUND
7 N/C
8 BLK(W2200) RIGHT FRONT PRESSURE SW.
9 BLK(W4200) LEFT REAR PRESSURE SW.
10 BLK(W3200) RIGHT REAR PRESSURE SW.
11 N/C
12 BLK(W1200) LEFT FRONT PRESSURE SW

AP46038 CN1 (BLACK)
PIN
1 N/C
2 N/C
3 RED(W6800) SWITCHED POWER
4 WHT(W6230) GROUND
5 CAN SHIELD
6 N/C
7 GREEN CAN LOW
8 YELLOW CAN HI

AP46038 CN10 (GRAY)
PIN
1 BLK(W7599) SWITCH LIGHT CONTROL
2 RED(W6100) RESET OUT
3 BLK(W7550) RESET IN
4 RED(W6121) WARN LIGHT SUPPLY
5 WHT(W6230) SWITCH LIGHT SUPPLY
6 BLK(W7699) WARN LIGHT/ALARM CONTROL

AP46038 CN11 (GRAY)
PIN
1 RED(W6110) IGNITION
2 N/C
3 N/C
4 N/C
5 RED(W6110) IGNITION
6 RED(W6100) BATTERY
7 WHT(W6230) GROUND
8 N/C
9 N/C
10 N/C
11 BLK(W9000) PARK BRAKE SWITCH
12 RED(W6100) BATTERY

AP46038 CN9 (GREEN)
PIN
1 BLK(W8500) MASTER RELAY CONTROL
2 BLK(W8100) SYSTEM PRESSURE SWITCH
3 N/C
4 BLK(W8600) PUMP RELAY CONTROL
5 N/C
6 BLK(W9901) PUMP MONITOR
7 N/C
8 N/C

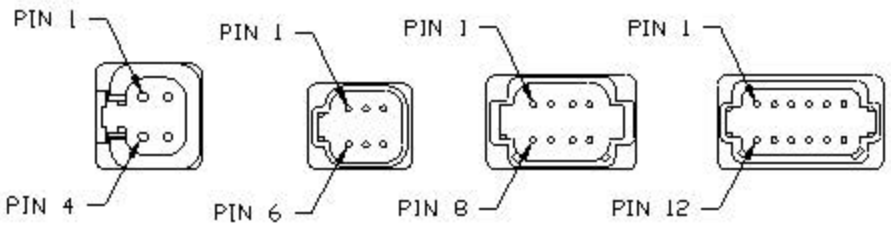

NOTE: DEUTSCH PIN NUMBERS TYPICAL UNLESS OTHERWISE NOTED

NOTE: WIRE NUMBERS ON THIS SHEET ARE REFERENCED TO HARNESS PLUGS.

NOTE: INSTALLATION MUST CONFORM TO GOOD SHOP PRACTICES, SAE STANDARDS, RVIA STANDARDS, AND OTHER APPLICABLE STANDARDS.

NO.	DATE	REVISION

HWH
I-80 EXIT 267 SOUTH
RT 1 MOSCOW, IOWA 52760

SCALE 1:3 | DATE 31MAY12 | DRAWN BY

SYSTEM SCHEMATIC ELEC

THE INFORMATION DISCLOSED ON THIS DRAWING IS CONFIDENTIAL AND MUST NOT BE DISCLOSED OR USED IN ANY MANNER WHICH WILL BE DETRIMENTAL TO THE HWH CORPORATION

DRAWING NUMBER
MP90790 A/E

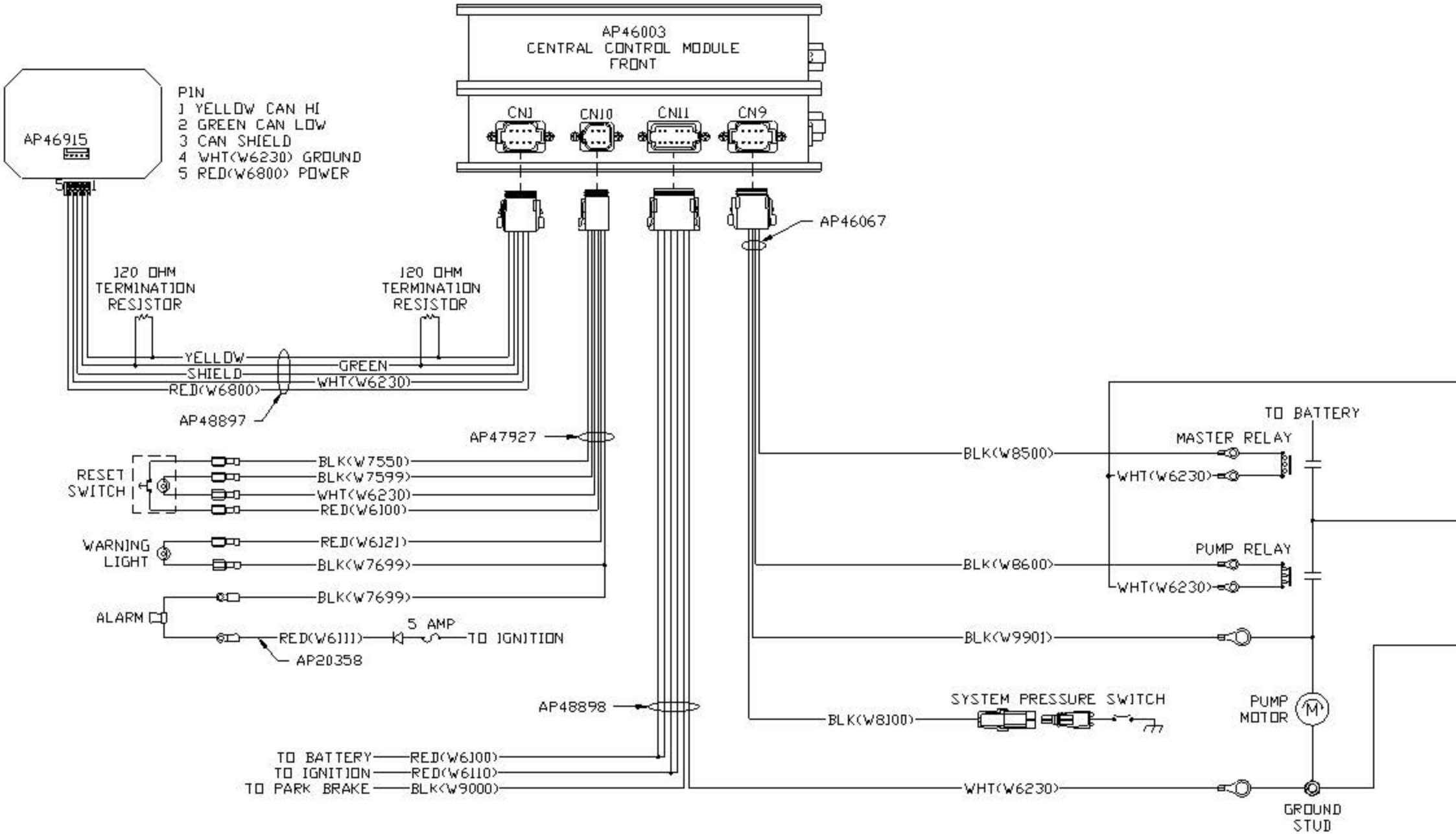

NOTE: INSTALLATION MUST CONFORM TO GOOD SHOP PRACTICES, SAE STANDARDS, RVIA STANDARDS, AND OTHER APPLICABLE STANDARDS.

MP90790 B
31MAY12

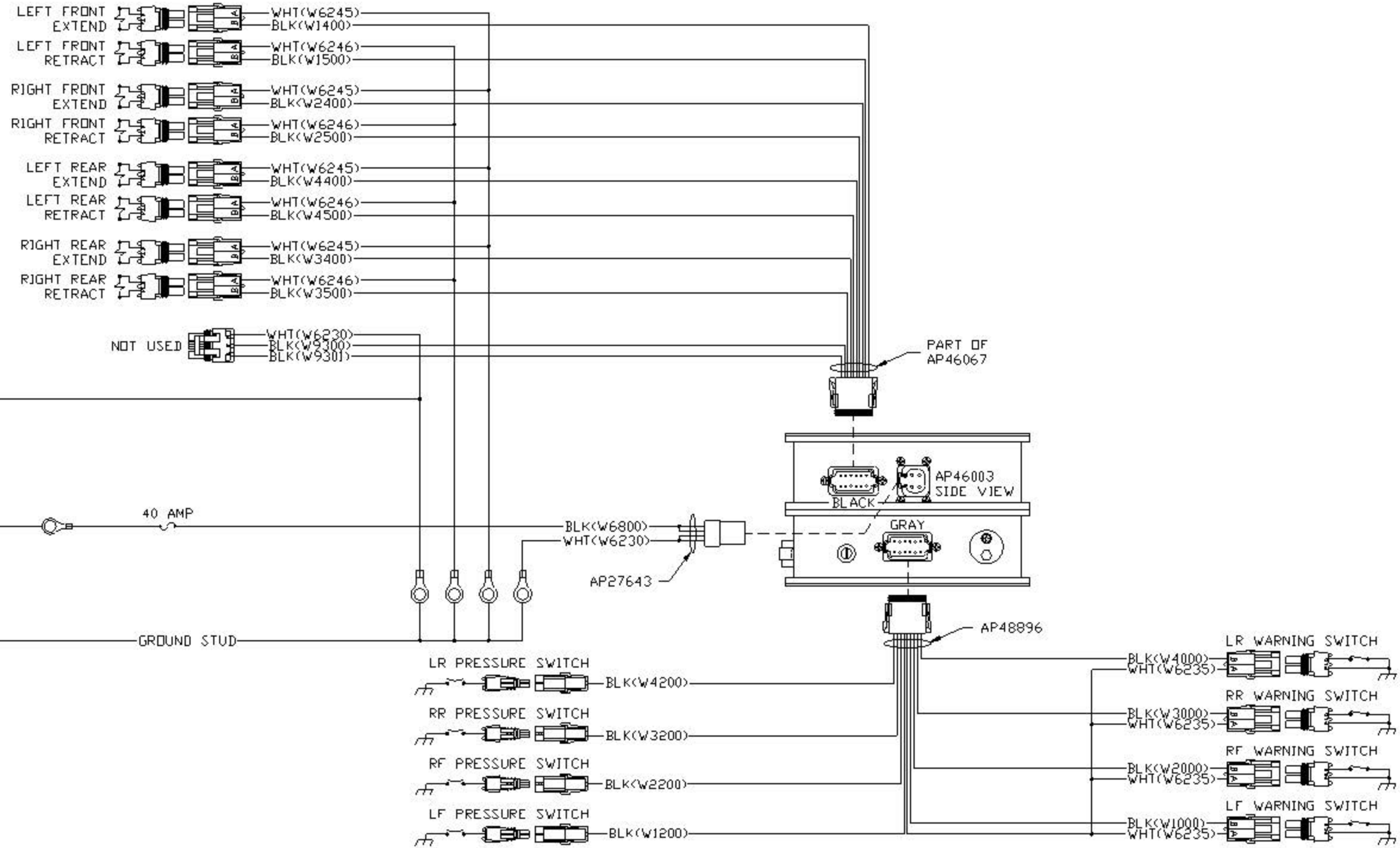

NOTE: INSTALLATION MUST CONFORM TO GOOD SHOP PRACTICES, SAE STANDARDS, RVIA STANDARDS, AND OTHER APPLICABLE STANDARDS.

MP90790 C
31MAY12

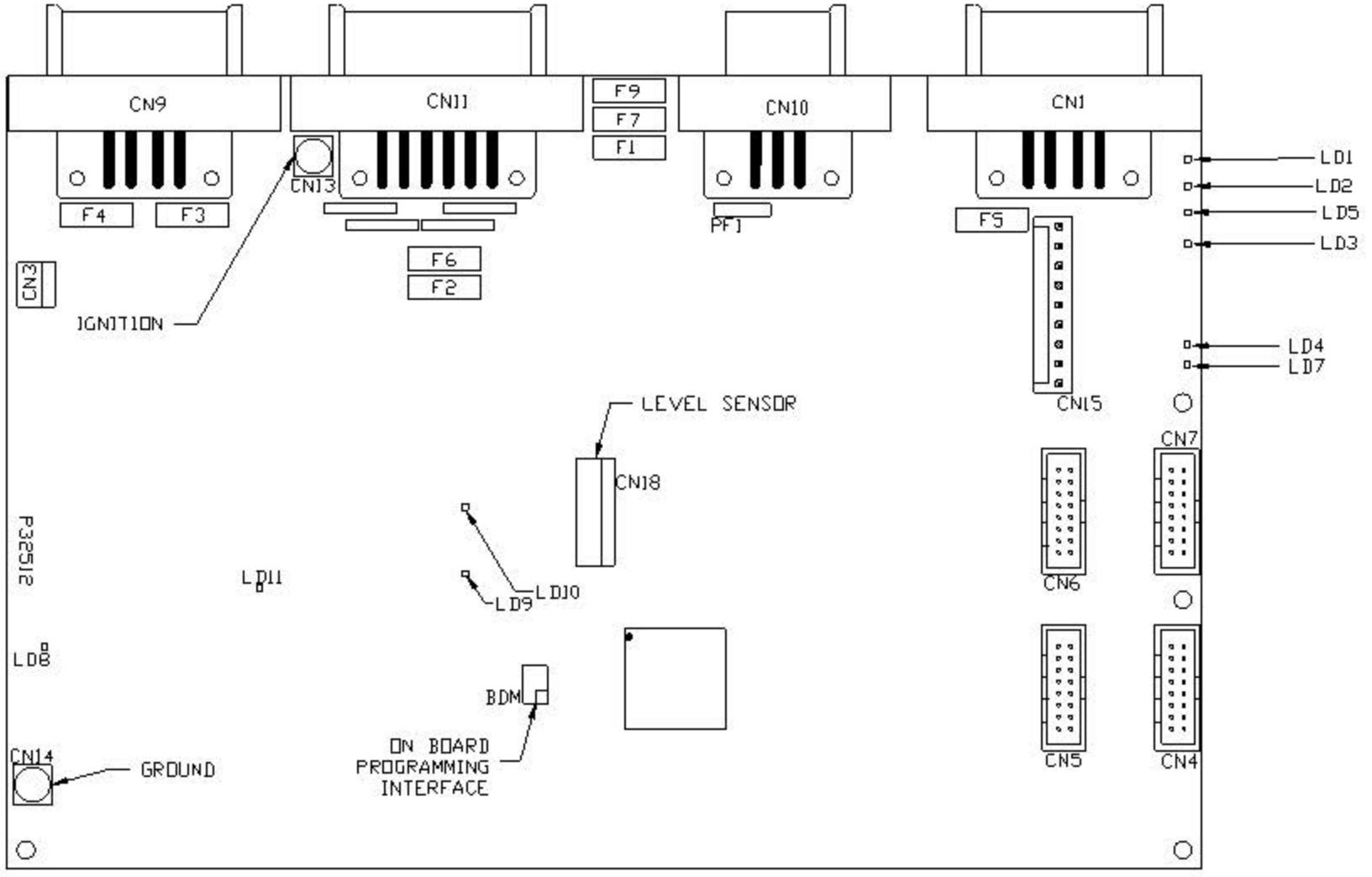

CENTRAL
CONTROL MODULE
LED LAYOUT

LED #	CONNECTOR	COLOR	DESCRIPTION
LED 1	CN 9 PIN 1	RED	MASTER RELAY
LED 2	CN 9 PIN 4	RED	PUMP RELAY
LED 3	CN 1 PIN 3	RED	SW 12V
LED 4	CN 11 PIN 12	RED	BATTERY
LED 5	NOT USED	RED	NOT USED
LED 7	CN 1 PIN 7 & 8	RED	LINK LIGHT
LED 8	NOT USED	RED	NOT USED
LED 9	NOT USED	RED	NOT USED
LED 10	CN 9 PIN 2	RED	SYSTEM PSW
LED 11	CN 11 PIN 11	RED	PARK BRAKE

FUSE #	DESCRIPTION
PF1	RESET OUT
F7 (3 AMP)	IGNITION
F1 (7.5 AMP)	IGNITION
F2 (15 AMP)	BATTERY
F3 (5 AMP)	MASTER RELAY
F4 (5 AMP)	PUMP RELAY
F5 (15 AMP)	SW. BATT TO CAN MODULES
F6 (3 AMP)	BATTERY
F9 (3 AMP)	POWER TO CN100

NOTE: INSTALLATION MUST CONFORM TO GOOD SHOP PRACTICES, SAE STANDARDS, RVIA STANDARDS, AND OTHER APPLICABLE STANDARDS.

MP90790 D
31MAY12

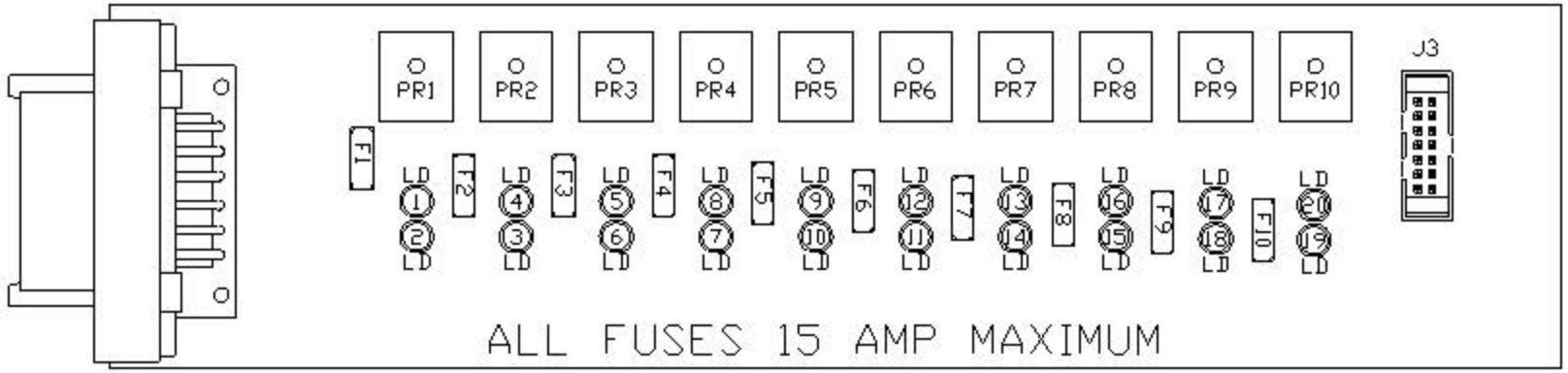

OUTPUTS
LED LAYOUT

LED #	COLOR	FUSE #	OUTPUT	RELAY #	DESCRIPTION
LED1	YELLOW	---	---	PR1	LEFT FRONT EXTEND (COIL)
LED2	RED	FUSE 1	PIN 1	PR1	LEFT FRONT EXTEND (CONTACT)
LED3	RED	FUSE 2	PIN 2	PR2	LEFT FRONT RETRACT (CONTACT)
LED4	YELLOW	---	---	PR2	LEFT FRONT RETRACT (COIL)
LED5	YELLOW	---	---	PR3	RIGHT FRONT EXTEND (COIL)
LED6	RED	FUSE 3	PIN 3	PR3	RIGHT FRONT EXTEND (CONTACT)
LED7	RED	FUSE 4	PIN 4	PR4	RIGHT FRONT RETRACT (CONTACT)
LED8	YELLOW	---	---	PR4	RIGHT FRONT RETRACT (COIL)
LED9	YELLOW	---	---	PR5	LEFT REAR EXTEND (COIL)
LED10	RED	FUSE 5	PIN 5	PR5	LEFT REAR EXTEND (CONTACT)

LED #	COLOR	FUSE #	OUTPUT	RELAY #	DESCRIPTION
LED11	RED	FUSE 6	PIN 6	PR6	LEFT REAR RETRACT (CONTACT)
LED12	YELLOW	---	---	PR6	LEFT REAR RETRACT (COIL)
LED13	YELLOW	---	---	PR7	RIGHT REAR EXTEND (COIL)
LED14	RED	FUSE 7	PIN 7	PR7	RIGHT REAR EXTEND (CONTACT)
LED15	RED	FUSE 8	PIN 8	PR8	RIGHT REAR RETRACT (CONTACT)
LED16	YELLOW	---	---	PR8	RIGHT REAR RETRACT (COIL)
LED17	YELLOW	---	---	PR9	NOT USED
LED18	RED	FUSE 9	PIN 9	PR9	NOT USED
LED19	RED	FUSE 10	PIN 10	PR10	NOT USED
LED20	YELLOW	---	---	PR10	NOT USED

HYDRAULIC JACK WARNING
AND PRESSURE SWITCHES

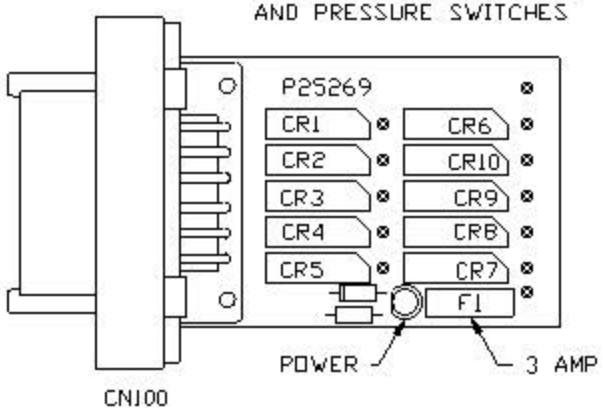

CONNECTOR	REED SWITCH	DESCRIPTION
CN 100 PIN 1	CR1	LEFT FRONT WARN. SW.
CN 100 PIN 2	CR2	RIGHT FRONT WARN. SW.
CN 100 PIN 3	CR3	RIGHT REAR WARN. SW.
CN 100 PIN 4	CR4	LEFT REAR WARN. SW.
CN 100 PIN 5	CR5	NOT USED
CN 100 PIN 6	---	GROUND
CN 100 PIN 7	---	NOT USED
CN 100 PIN 8	CR7	RIGHT FRONT PRESS. SW.
CN 100 PIN 9	CR8	LEFT REAR PRESS. SW.
CN 100 PIN 10	CR9	RIGHT REAR PRESS. SW.
CN 100 PIN 11	CR10	NOT USED
CN 100 PIN 12	CR6	LEFT FRONT PRESS. SW.

NOTE: INSTALLATION MUST CONFORM TO GOOD SHOP PRACTICES, SAE STANDARDS, RVIA STANDARDS, AND OTHER APPLICABLE STANDARDS.