INSTALLATION INSTRUCTIONS
SINGLE CYLINDER GUIDED ROOM EXTENSION
STOP PLATE AND BEARING PAD KIT

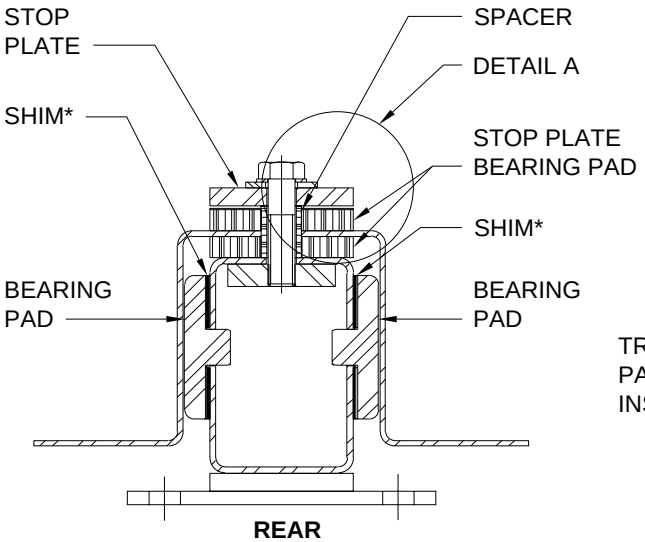

REAR

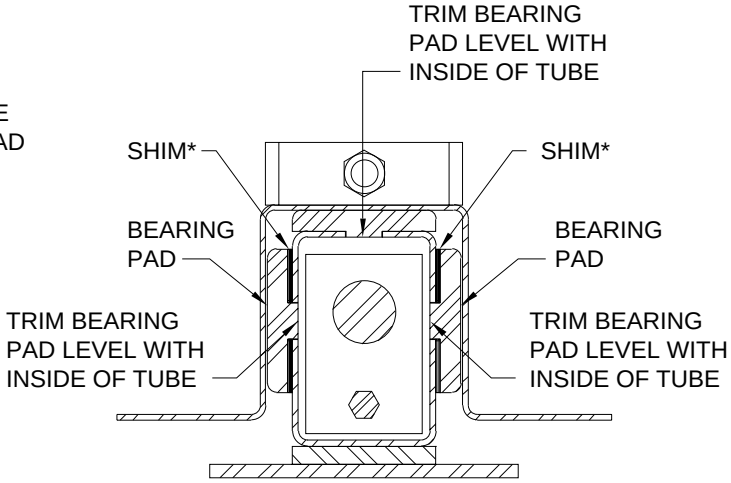

FRONT

***NOTE:** SHIM ASSEMBLY TO PROVIDE 0.020 INCH AND 0.040 INCH TOTAL CLEARANCE BETWEEN INNER AND OUTER TUBES. DO NOT GREASE OR LUBE PADS OR TUBES.

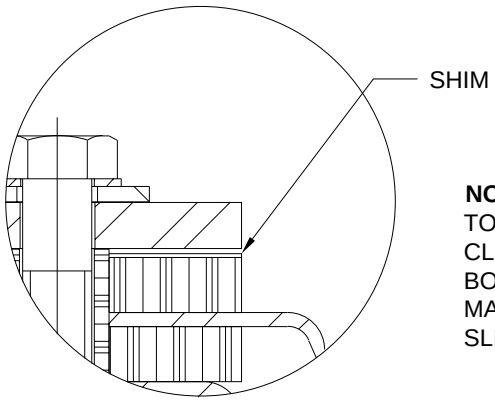

DETAIL A

NOTE: SHIM ASSEMBLY TO PROVIDE 0.010 TO 0.030 CLEARANCE BETWEEN STOP BOLT PLATE AND BEARING PAD. MAKE SURE ASSEMBLY CAN SLIDE FREELY.