HWH® 2000 SERIES
COMPUTER-CONTROLLED
PRECISION HYDRAULIC LEVELING SYSTEM

LDV / 4D SECURITY

Abbreviated Flow Chart

Quick Reference Diagnostic Guide

Component and System Function Explanation

HWH CORPORATION
(On I-80, Exit 267 South)
2096 Moscow Road | Moscow, Iowa 52760
Ph: 800/321-3494 (or) 563/724-3396 | Fax: 563/724-3408
www.hwh.com

ML51385/MP04.4150
12DEC12

ABBREVIATED PRECISION LEVELING FLOW CHART

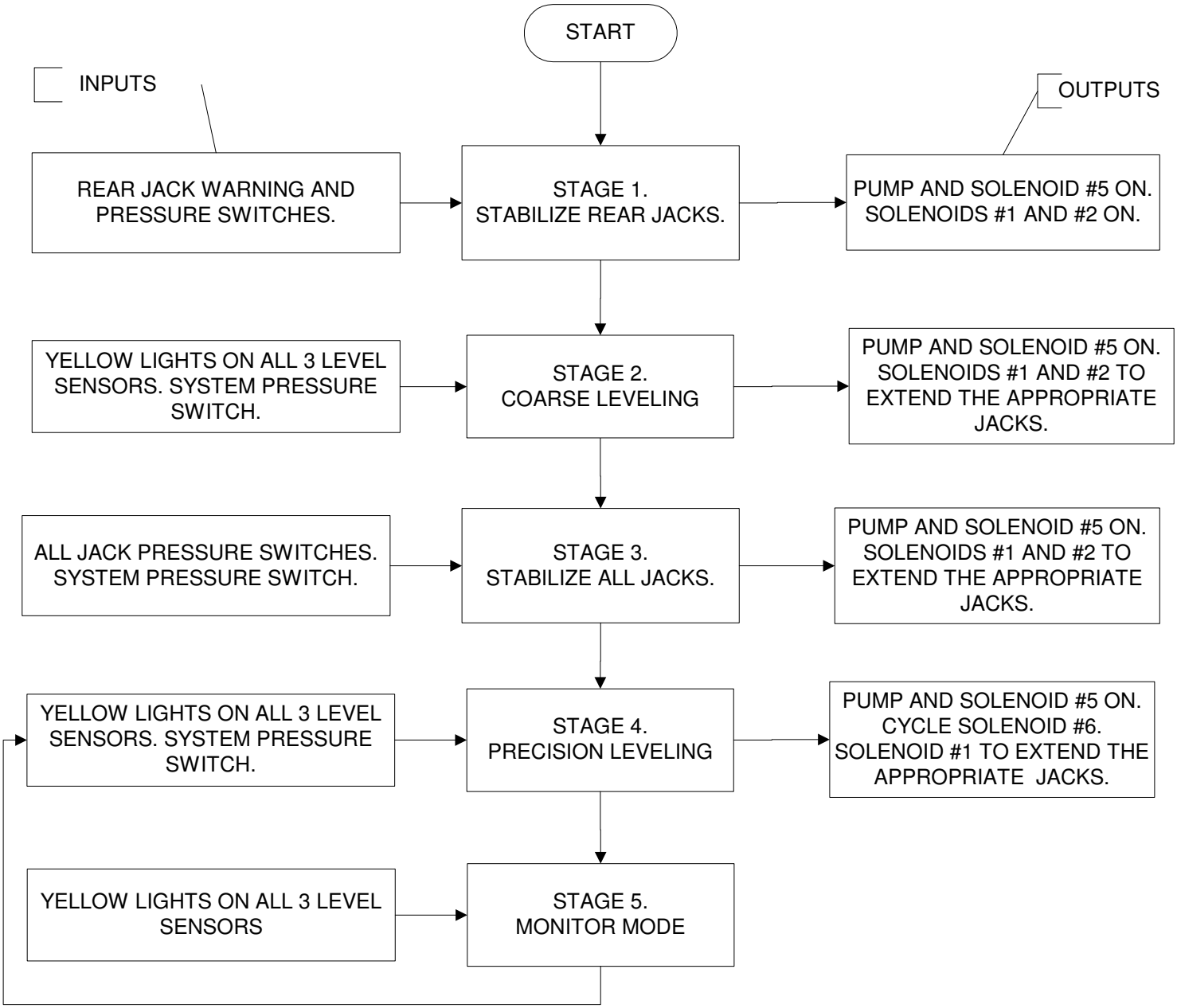

ABBREVIATED STORE FLOW CHART

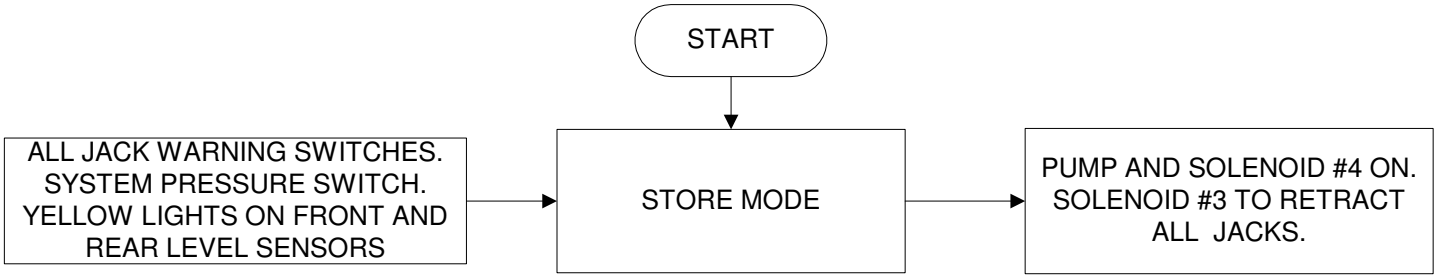

A47768A/A
12DEC12

QUICK REFERENCE DIAGNOSTIC GUIDE

LDV/4D Security Precision Leveling

The following is a diagnostic guide to perform minor checks in the field that may solve a simple problem. This is not a complete repair manual and will not cover all issues and solutions or repairs. If the suggestions in this quick reference guide do not help solve the problem, more involved diagnostic steps will have to be performed to find and repair the issue.

The system will not function at all. There are no lights on the HWH touch panel. The system does not react at all when touch panel buttons are pushed.

1. Check that power is on to the system.
2. Check the central control module mother board for any lit LED's. If no LED's are lit, there may be a problem with the power supply to the central control module, fuses blown in the central control module or a problem with the central control module. If there are LED's lit on the central control box mother board, the problem is the central control box, the harness to the touch panel or the touch panel.
3. There may be a low voltage issue.

The pump will not run.

1. Push the manual pump run switch for the power unit at the back of the vehicle. If the pump runs, there is a problem with the central control module or the wiring from the central control module. If the pump does not run, there may be a problem with the power for the pump, the master or pump relays or the pump motor.

2. There may be a low voltage issue.

The "NOT IN PARK" touch panel light is on.

1. Set the park brake
2. If the park brake is set, the central control module is not getting the park brake signal or there is a problem with the central control module.

Note: If the system is operating but not leveling properly, the first thing to do is to check that the jack manifold and pump manifold solenoid valves are closed. The removable valve release cams should not be left on the solenoid valves and may be holding a valve open

The following steps can be used to diagnose valve problems that will cause issues during automatic leveling procedures. These issues can include jacks extending too far, jacks not extending, jacks not staying in place or jacks not retracting.

Step 1: Test for valve #1 **(Jack extending when it is not supposed to.)**

With all jacks fully retracted, manually open valve #5. Press and hold pump run toggle switch. When pump is pressurized, open valve #6 for 4 seconds, then close valve #6 for 4 seconds. Repeat the cycling of valve #6 10 times. Release pump run toggle switch. Verify that all 4 jacks are still fully retracted. If a jack(s) is extended, valve #1 on that jack(s) is open or faulty.

Step 2: Test for valve #2 **(Jack extending too far.)**

With all jacks fully retracted, manually open valve #5 and all four #1 valves. Press and hold pump run toggle switch. When pump is pressurized, open valve #6 for 4 seconds then close valve #6 for 4 seconds. Repeat the cycling of valve #6 10 times. Release pump run toggle switch. Measure all 4 jacks. There should be approximately .5" to .75" of rod exposed. If a jack(s) is extended too much, valve #2 on that jack(s) is open or faulty. If a jack(s) did not extend far enough, valve #1 or the manifold is faulty. Focus on valve #1.

Step 3: Test for valve #2 and #3 **(Jack not extending or holding weight.)**

Manually open valve #5 and all four #1 valves and #2 valves. Press and hold pump run toggle switch until all four jacks are firmly extended on to the ground, then release switch. Verify that all jacks have extended and are supporting the weight of the vehicle. If step 2 was successful and a jack(s) did not extend, valve #2 is faulty. If the jack(s) did extend but do not support the weight of the vehicle valve #3 is faulty.

Step 4: Electrical **(Jacks won't extend or retract.)**

Each jack can be operated independently using the HWH control panel. Press and hold an up arrow to extend the selected jack. Verify the jack extends. If the jack fails to extend, use a meter at the harness plug for the solenoid valves to verify that valves #1, #2 and #5 have 12Vdc applied. Place finger on valve stem and cycle on/off to verify valves are electrically actuated.

Press and hold a down arrow to retract the selected jack. Verify the jack retracts. If the jack fails to retract, use a meter at the harness plug for the solenoid valves to verify that valves #3 and #4 have 12Vdc applied. Place finger on valve stem and cycle on/off to verify valves are electrically actuated.

The following are possible problems that may be encountered when operating the leveling system. The most likely cause (or causes) is listed after the symptom.

The pump runs but jacks don't extend. The pump freewheels.

1. Most likely, the #6 pump manifold valve is open.
2. The pump relief may be set low or not functioning properly.
3. Check oil level.

Some jacks extend, one or more will not extend. The pump freewheels.

1. The #3 jack manifold valve is open.

The pump runs but jacks don't extend. The pump loads up.

1. The #5 pump manifold valve is not opening.

Some jacks extend, one or more will not extend.

1. The #1 jack manifold solenoid valve is not opening

One or more jacks will not stay extended.

1. The #3 jack manifold solenoid valve is open or has an internal leak.

One or more jacks extend too far.

1. The sensing unit may not be adjusted properly or is not working properly.
2. A jack pressure switch is not working properly.
3. The #2 jack manifold solenoid valve is open during the precision leveling mode.
4. The jack manifold metering tube is not functioning properly during the precision leveling mode.

One or more jacks extend when it should not be extending..

1. The #1 jack manifold solenoid valve is open when it should not be.

The pump runs but jacks don’t retract. The pump freewheels.

1. Most likely, the #6 or #5 pump manifold valve is open.

The pump runs but jacks don’t retract. The pump loads up.

1. The #4 pump manifold valve is not opening.

Some jacks retract, one or more will not retract.

1. The #3 jack manifold solenoid valve is not opening

COMPONENT AND SYSTEM FUNCTION EXPLANATION

PRECISION LEVELING – double-acting jacks – LDV/4D Security motorized vehicles

The precision leveling system is a 2000 series CAN, four jack, leveling system.

EQUIPMENT INFORMATION

Jack information: (See Fig. 1) The jacks are double-acting cylinders with pivoting feet [A]. The jacks do not have pivot brackets and are mounted solidly to the frame of the vehicle. Each jack has a hydraulic manifold [B] and an I/O module [C] attached. Each jack has a jack down warning switch [D] and a pressure switch [E]. Both of these switches are switched grounds. The jack warning switch contacts are closed when the jack is extended approximately 1 inch. The jack pressure switch is closed when the jack is firmly on the ground.

Jack manifold information: (See Fig. 1) The jack manifold has 3 solenoid valves [F]. The valve positions are stamped on the manifold as 1, 2 or 3. The solenoid valves are equipped with removable valve release cams. There is a common pressure line from the pump manifold to the bottom of the each jack manifold [G] and a common low pressure return line from the each jack manifold [H] to the pump manifold. Hydraulically, the jack manifold is directly connected to the jack. (No hoses or tubes) There is a common pressure line from the pump manifold to the rod end of each jack [I]. Each jack manifold has a metering tube [J] with a high pressure spring. There is an adjustment bolt with a jam nut at the bottom of the tube. This adjustment controls how far a jack will move during the precision leveling sequence. **The adjustment of the metering tube is done at HWH. Adjustment of the metering tube is critical and moving the adjustment will alter the performance of the leveling system during the precision leveling mode. Adjusting the metering tube is a complicated procedure and should not be attempted without contacting HWH for specific instructions.**

Jack I/O module information: (See Fig. 1) There is a specific I/O module [C] for each corner (each jack) of the vehicle. The modules cannot be interchanged between jacks. The solenoid valve wires from the I/O module are labeled 1, 2 or 3 and must be connected to the appropriate jack manifold solenoid valve [F]. The jack warning switch [D] and pressure switch [E] connect to the I/O module. There is a main CAN trunk line that connects each jack I/O module to the central control module. Each I/O module has red output LEDs for each jack manifold solenoid valve. These LED's will be on when there is power to the appropriate solenoid valve. The I/O module also has a command light. This light will be on if the central control module has control of the jack I/O module. The light will be off if the jack I/O module has control. The rear level sensing unit is connected to the right rear I/O module. The front level sensing unit is attached to the right front I/O module.

Pump manifold assembly information: (See Fig. 2) The system has one pump manifold assembly [A] . The manifold has 3 solenoid valves [B] that are labeled 4, 5 and 6. The solenoid valves are equipped with removable valve release cams. All of the jack and pump manifold solenoid valves are the same except the number 6 valve on the pump manifold. This valve is a special hi-flow valve and cannot be interchanged with any of the other valves in the system. The pump manifold has a 2,000 psi pressure switch [C] for excess slope and precision leveling. The pump motor [D] is a 24 volt motor and has a pump relay [E] mounted on the motor with a band clamp. The pump relay is controlled with a +12 volt signal from the central control module. The pump relay only comes on when the pump is called for. The manifold is equipped with an auxiliary hand pump [F] that can be used to extend or retract the jacks in the case of a pump or electrical failure.

Master relays: (See Fig. 2) The system has two master relays. They are mounted close to the pump manifold assembly. One of the master relays controls +24 volt [G] power to the pump motor. The other master relay controls +12 volt [H] power to the central control module and to each jack I/O module. The relays are controlled by a +12 volt signal from the central control module. The master relays will be on any time there is power to the central control module EXCEPT when the system is in the monitor mode after precision leveling has been accomplished or if the park brake is not set.

Central control module: (See Fig. 3) The central control module [A] is mounted in a compartment in front of the generator. The central control module controls the master relays, the pump relay and the pump manifold assembly solenoid valves. The center level sensing unit is connected to the central control module [B]. The central control module has a “mother board” [C] and an output board [D]. The mother board has information LEDs and fuses. The output board has a series of relays, LEDs and fuses to control the pump/manifold solenoid valves. The relays [E] are controlled by the mother board. The fuses [F] protect the outputs. There is a yellow and red LED for each output. The yellow LED [G] indicates the system has turned that relay on. The red LED [H] indicates there should be power on the output pin for that relay. The central control module is equipped with a level sensing unit adjustment enhancement switch [I]. The switch has two positions; NORMAL (110) and OVERRIDE (220). The switch should be in the NORMAL position for leveling procedures, manual or automatic. The switch should only be in the OVERRIDE position when adjusting the level sensing units. In the OVERRIDE position, the sensing units will be in a “super” sensitive mode that allows the sensing units to be adjusted to the best possible position.

Level sensing unit information: (See Fig. 4) There are three level sensing units; one at the front of the vehicle and two in the rear area of the vehicle. We will refer to one of these sensing units as the “center” level sensing unit and the other is the “rear” level sensing unit. The sensing units are NOT unique for front, rear or center position and can be interchanged with each other. They are different sensing units than are used in non-precision leveling systems and cannot be interchanged with sensing units from other leveling systems.

The level sensing units have two parameters, a wide tolerance for basic leveling and a tighter tolerance for precision leveling and adjusting the sensing units. Switching parameters is controlled by the central control module. The rear sensing unit is connected to the right rear jack I/O module. The center sensing unit connects directly to the central control module and the front sensing unit connects to the right front jack I/O module. The sensing units are mounted solidly to a sensing unit adjustment assembly [A]. The assembly has two steel plates separated by three very stiff springs. The sensing unit [B] is mounted to the top plate. The assembly is held together with three bolts, one through each spring. One bolt is the pivot point [C] for the assembly and is not turned during the adjustment procedure. The other two mounting bolts are the adjustment bolts [D]. The assembly must be mounted to a very solid surface. Each sensing unit is equipped with four yellow LEDs[E] that are used to adjust the sensing unit. These LEDs can be viewed through the top plate of the assembly. The adjustment bolts are tightened or loosened as necessary to turn out all four yellow level LEDs. On the sensing units, only one or two LEDs should be on at any one time. Due to the use of a front and rear level sensing unit, it is possible to see both side yellow level lights for the system touch panel on at the same time.

The front sensing unit is used to determine required leveling for side to side at the front of the vehicle. The rear sensing unit is used to determine required leveling for side to side at the rear of the vehicle. Neither the front nor rear sensing unit is considered for front to rear leveling requirements. The center sensing unit is used to determine required leveling for front to rear of the vehicle. The center sensing unit is ignored when determining any side to side leveling requirements. When precision leveling is complete, it is possible, although unlikely; to see a side yellow LED on the center sensing unit or a front/rear LED on either the front or rear sensing unit. No level light would be on at the touch panel.

The central control module is equipped with a level sensing unit adjustment enhancement switch. The switch has two positions; NORMAL (110) and OVERRIDE (220). The switch should be in the NORMAL position for leveling procedures, manual or automatic. The switch should only be in the OVERRIDE position when adjusting the level sensing units. In the OVERRIDE position, the sensing units will be in a "super" sensitive mode that allows the sensing units to be adjusted to the best possible position. The LEDs on the sensing units will tend to "jump" around some when the enhancement switch is in the OVERRIDE position.

Touch panel information: See Fig. 5 The system is equipped with a touch panel that can be used to operate the system. The touch panel will have automatic and manual control of the system. The precision leveling touch panel allows control of individual jacks in the manual mode of operation. Only the touch panel can be used for manual control of the leveling system.

Manual pump run switch: There is a manual toggle switch mounted close to the pump. This switch can be used to run the pump while manually opening solenoid valves. It is important to not run the pump continuously for more than 20 minutes without allowing the pump motor to cool.

Note: Detailed hydraulic and electrical connection diagrams with LED information are available in the operator's manual. The operator's manual, ML48966, is available at www.hwh.com.

OPERATIONAL INFORMATION

Basic jack extension: When extending jacks in manual or basic automatic leveling, the pump runs, the number 5 pump manifold valve is opened and the appropriate number 1 and 2 jack manifold valves are opened.
Basic jack retraction: Any time a jack is being retracted, the pump runs, the number 4 pump manifold valve is opened and the appropriate number 3 jack manifold valve is opened.

Automatic leveling: The automatic leveling sequence is done in two parts. First a coarse or basic leveling and stabilizing procedure is performed to the wider tolerance of the sensing units. When the coarse leveling and stabilizing procedure is finished, the system will automatically start the precision leveling procedure. The system has three level sensing units; a front sensing unit, a center sensing unit, and a rear sensing unit. The center sensing unit controls front to rear leveling while the front and rear sensing units control side to side leveling.

Automatic leveling can be accomplished using the HWH touch panel or by a signal from the vehicle controls. If the HWH touch panel is used, pushing the "AUTO LEVEL" button one time starts the procedure. The vehicle park brake must be set for the leveling system to function.

Note: Because the system uses three level sensing units, due to the possibility of the vehicle being twisted, it is possible the touch panel will show both side yellow level lights on at the same time.

Coarse (Basic) leveling: When auto leveling is started, the system will extend the rear jacks until both rear jack pressure switches are on. Then the system will extend any jack needed to turn any side leveling light out before leveling the vehicle front to rear. Depending on which, if any, front and/or rear level sensing unit side lights are on, one or two jacks may be used to turn the side level lights out. It is possible that an opposing front and rear jack may extend at the same time to turn out the side leveling lights. When only a front or rear touch panel level light is on, the system will extend both front or rear jacks to turn that light off. The following are several examples of what may take place.

Example 1. The touch panel front level light is on along with the left side level light. The left side light is on because of the front sensing unit. The system will deploy the left front jack by itself until the side light goes out. If a rear level sensor left or right side light comes on while extending the front jack, the appropriate rear jack will extend. When both front and rear level sensor side lights are off, and the center level sensing unit front level light is still on, both front jacks will extend to turn the front level light out.

Note: When extending the front or rear jacks, if a front or rear level sensing unit side light comes on, the appropriate jack will stop extending to avoid twisting the vehicle.

If when the center level sensing unit front light is off there is a front or rear level sensing unit side light on, the system will extend the appropriate jack(s) to turn the side light(s) off.

Example 2. Both touch panel side level lights are on. The right front level sensor light is on and the left rear level sensor light is on. The system will extend the right front and left rear jacks. The left rear level sensor light goes out. The left rear jack stops extending. The right front continues until the right front level sensor light goes out. If a rear level sensor light, right or left, comes on while the front sensor light is still on, the appropriate rear jack will extend until the rear sensor light goes out. This will continue until both front and rear level sensor side lights are off at the same time. If the center level sensing unit front or rear light comes on while the system is satisfying the front and rear level sensing units, the system will ignore that light until the front and rear level sensor lights are out. If a front or rear level light does come on, refer to Example 1 for the leveling procedure.

Jack and pump/manifold solenoid valve operation, coarse leveling and stabilizing: During automatic leveling, the number 5 pump manifold solenoid valve is turned on and stays on for the duration of the complete leveling procedure, coarse and precision leveling. The appropriate number 1 and 2 jack manifold solenoid valves are turned on when the system requires a jack to be extended for coarse leveling and the stabilizing procedures.

When the front and rear level sensing unit side lights are off and the center level sensing unit front and rear lights are off, the system will then go through a stabilize procedure.

Stabilize procedure: Each jack has a pressure switch. The pressure switch sends a ground signal to the jack I/O module when the jack is firmly on the ground. The jack may lift the vehicle slightly before the pressure switch comes on.

When stabilizing the vehicle the system will first check the rear jack pressure switches. If either pressure switch is not on, the system will extend both rear jacks until both rear jack pressure switches are on. When both rear jack pressure switches are on, the system will check the front jack pressure switches. If either front jack pressure switch is not on, the system will extend both front jacks until both front jack pressure switches are on. The system will continue to alternately check the rear then the front jack pressure switches until all four jack pressure switches are on.

Note: If the 2,000 psi system pressure switch comes on for 20 seconds during the stabilize procedure, the system will shut down and turn on the touch panel “EXCESS SLOPE” light.

When the coarse leveling and stabilizing procedures are done, the system will begin the precision leveling procedure.

Precision leveling: When the precision leveling procedure starts, front to rear leveling is satisfied first using the center level sensing unit. After front to rear precision leveling is completed, side to side leveling with the front and rear level sensing units starts. During precision leveling, the pump runs continuously.

The number 1 jack manifold valve is opened for jacks that are to be extended during precision leveling. The number 5 pump manifold valve is opened during the complete precision leveling process. While running, the pump will cycle from going over the relief valve to a freewheeling state. The 2,000 psi pump manifold pressure switch controls the sequence. The number 6 pump manifold valve will cycle during the precision leveling process.

Jack and pump manifold valve operation, precision leveling: The number 5 pump manifold solenoid valve will be open. The appropriate number1 jack manifold valve (or valves) opens and remains opened for jacks that are required to extend for the precision leveling procedure. The number 1 valve(s) will close when as the level sensing units are satisfied. The pump runs continuously during the precision leveling procedure. As the pump builds pressure, the jack manifold metering assembly forces fluid into the cap end of the jack(s). The jack(s) will extend approximately .070”.
When the 2,000 psi system pressure switch is made, the system runs under load for three (3) seconds then the number 6 pump manifold valve opens. This unloads the system pressure and allows the jack manifold metering assembly to reset. After four (4) seconds, the number 6 valve closes and the sequence repeats until the level sensing unit tolerances are satisfied.

Precision leveling sequence: The precision leveling procedure starts by checking the center level sensing unit. If a front or rear level light is on, the system will start extending both front or both rear jacks to satisfy the center level sensing unit. During the precision leveling sequence, the pump will go through a loading and unloading sequence approximately every 10. Each time the pump cycles between loading and unloading, the jacks will extend approximately .070”. (70 thousandths of an inch) The cycling will continue until the center level sensing unit is satisfied.

After the center level sensing unit is satisfied or if there is no front or rear level light on after coarse leveling and stabilizing is done, the system checks the front and rear level sensing units. If any side level lights are on, the system extends the appropriate jack(s) to turn these lights off and satisfy the front and rear level sensing units. When doing the precision side to side leveling, the system will extend one or two jacks, depending on lit level sensing unit lights. Opposing front or rear jacks may extend at the same time.

Example: The right side front level sensing unit light is on. The left side rear level sensing unit light is on. The system will extend the right front and left rear jacks at the same time. Each jack will continue to extend until the level sensing unit controlling that jack is satisfied with the level light out.

As when leveling front to rear, during the precision leveling sequence for side to side leveling, the pump will go through a loading and unloading sequence approximately every 10. Each time the pump cycles between loading and unloading, the jack(s) will extend approximately .070”. (70 thousandths of an inch) The cycling will continue until both the front and rear level sensing units are satisfied.

If a front or rear center level sensing unit light comes on while side to side leveling is being accomplished, that light will be ignored until the front and rear level sensing unit side lights are all off. Both front or both rear jacks will then be extended as necessary using the loading and unloading sequence. The system will continue to cycle between front to rear leveling and side to side leveling until the center level sensing unit front and rear lights are off; and the front and rear level sensing unit side lights are off.

When all level sensing unit lights are off, the pump will shut off and all pump manifold solenoid valves and all jack manifold solenoid valves will be turned off. The system will now be in the “monitor” mode.

Monitor mode: After automatic precision leveling is accomplished, the system goes into a monitor mode. In the monitor mode, the system simply watches the level sensor lights and will re-level the vehicle if a level light comes on. When the level process is started from the monitor mode, the system goes directly to the precision leveling procedure. When leveling is accomplished, the system returns to the monitor mode.

When in the monitor mode you:
- push the "STOP" button. This suspends the monitor mode.
- push the "AUTO LEVEL" button. Nothing happens. The system will remain in the monitor mode.
- push the "AUTO STORE" button. This cancels the monitor mode and after a brief pause, an auto store operation is started.
- push a manual up or down arrow, nothing will happen.
- remove power from the Central Control Module. This cancels the monitor mode.

If the monitor mode has been suspended, pushing the "STOP" button will do nothing.
- pushing the "AUTO LEVEL" button will re-initiate the monitor mode. If a level light is on, the leveling process will start at the precision leveling procedure and return to the monitor mode after precision leveling is accomplished.
- pushing the "AUTO STORE" button will cancel the monitor mode and after a brief pause will start an auto store procedure.
- pushing a manual up or down arrow will cancel the monitor mode. The jack will extend or retract depending on which button is pushed.
- and power is removed from the Central Control Module, the monitor mode is canceled

If the monitor mode has been cancelled, pushing the "AUTO LEVEL" button will start the leveling procedure at the beginning, starting with coarse leveling and stabilizing. Pushing "STOP" or removing power from the Central Control Module will do nothing. Pushing "AUTO STORE" will start an automatic store procedure. The manual up and down arrows will function as they normally do.

Excess Slope: The "Excess Slope" light will only come on during the coarse leveling or stabilizing procedure of automatic leveling. While extending jacks, if one or more jacks are fully extended, a level light is still on and the 2,000 psi system pressure switch comes on steady for 5 seconds, the system will shut off and turn the "Excess Slope" light on. During the stabilize procedure, if the 2,000 psi system pressure switch comes steady for 20 seconds, the system will shut down and turn the "Excess Slope" light on. The "EXCESS SLOPE" light will not come on during the precision leveling procedure. Precision leveling will continue until the pump run timer has been exceeded. See "Pump run timer".

If the "EXCESS SLOPE" light has come on, the light will be on any time there is power to the Central Control Module until the jacks have been fully retracted manually or automatically; or if the park brake is released when there is power to the Central Control Module. The manual up and down arrows on the touch panel will function if the "EXCESS SLOPE" light is on.

Pump run timer: The system monitors how long the pump runs. If the accumulative pump run time exceeds 20 minutes, the system will shut down. This can happen during the precision leveling procedure, when operating the system with the manual up and down arrows on the touch panel or when the system is performing an automatic store procedure.

Note: The pump run timer does not affect the manual pump run toggle switch. It is important to not exceed a pump run time of 20 minutes without allowing the pump motor to cool.

If the pump run timer has been exceeded, the four red jack down warning lights on the HWH touch panel will flash and the master jacks down warning light will flash. This will continue for 20 minutes. After 20 minutes the lights will stop flashing and the system can be operated.

It is not recommended to remove power from the Central Control Module to operate the pump before the 20 minute cool down time has elapsed.

Manual extend or retract of jacks: Jacks are manually controlled with the up and down arrows on the right side of the touch panel. The manual buttons will function anytime there is power to the central control module except if the “Auto Level” light or “Store” light is flashing. There is an up arrow and down arrow for each jack. The up arrows extend the jacks (raise the vehicle) and the down arrows retract the jacks (lower the vehicle). More than one up or down arrow can be operated at the same time to operate jack pairs but an up arrow and down arrow cannot be operated at the same time. When manually leveling, it is suggested to level the vehicle front to rear if needed before leveling side to side.

Note: It is important to remember the side leveling lights on the touch panel are controlled by a front and rear level sensing unit. There is no way to know which jack to operate to turn a side light off without looking at the front and rear sensing units. Be careful to not twist the vehicle if operating the system manually.

Auto store procedure: Power must be on to the Central Control Module to use the “AUTO STORE” button. The park brake must be set. When the “AUTO STORE” button is pushed, the Auto Store light on the touch panel will start to flash. The pump will run and the jacks will start to retract.

The pump will run with the number 3 jack manifold valves and the number 4 pump manifold valve open until the jacks have retracted. When all the jacks are fully retracted with their touch panel red jack down warning lights off, the system looks for the 2,000 psi system pressure switch on the pump manifold. Ten seconds after the pressure switch comes on the pump shuts off. Ten seconds after the pump shuts off, all loads shut off.

The system will store the two front jacks as a pair and the two rear jacks as a pair. The system will monitor the front and rear level sensing units. If a level sensing unit shows an end of the vehicle is twisting, the system will stop retracting a jack. This is done to help lower the vehicle in as level of a position as possible.

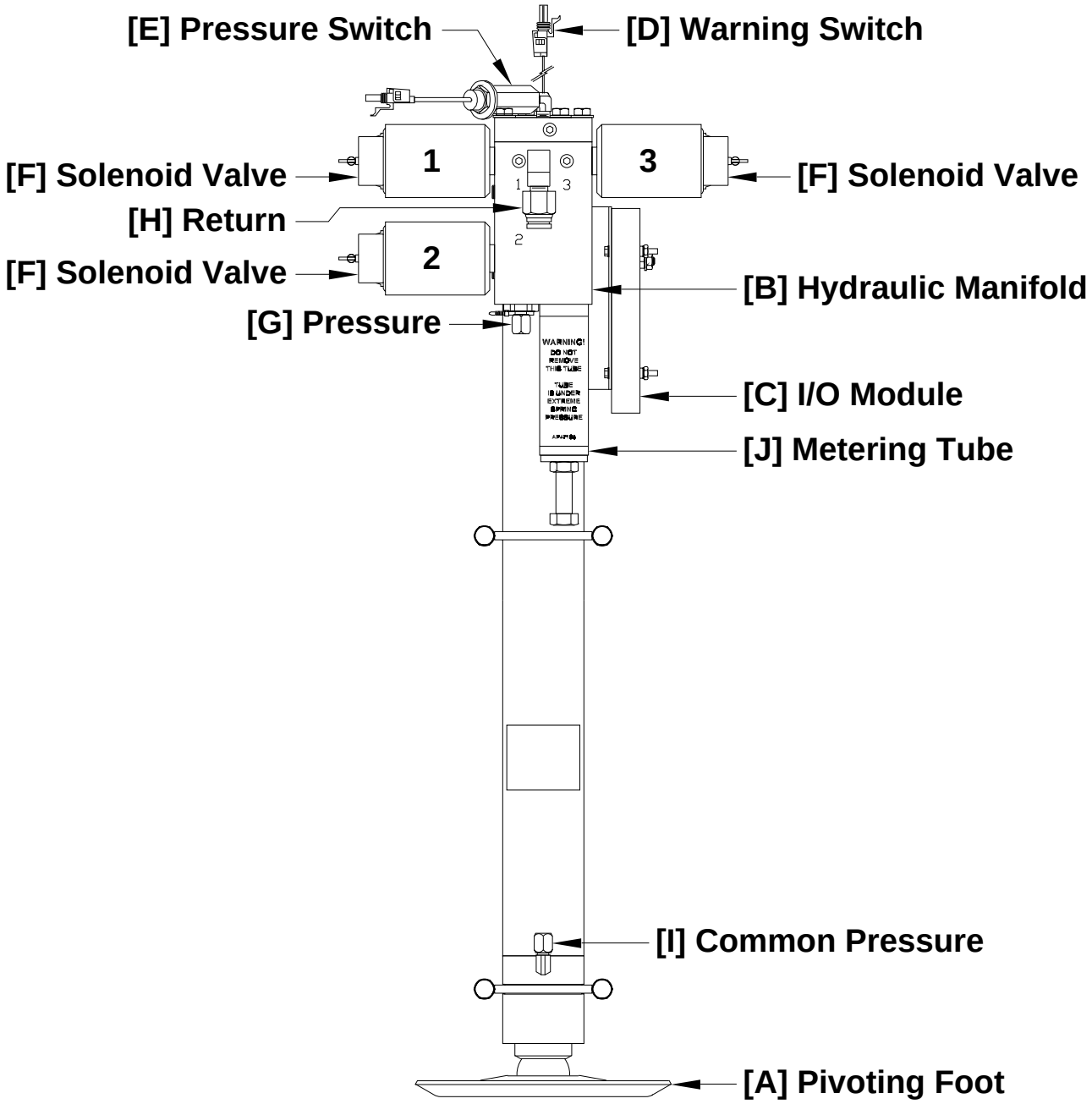
[E] Pressure Switch
[D] Warning Switch
[F] Solenoid Valve
[F] Solenoid Valve
[H] Return
[F] Solenoid Valve
[G] Pressure
[B] Hydraulic Manifold
[C] I/O Module
[J] Metering Tube
[I] Common Pressure
[A] Pivoting Foot
1
3
2
WARNING!
DO NOT
REMOVE
THIS TUBE
THIS IS UNDER
EXTREME
SPRING
PRESSURE

Fig. 1

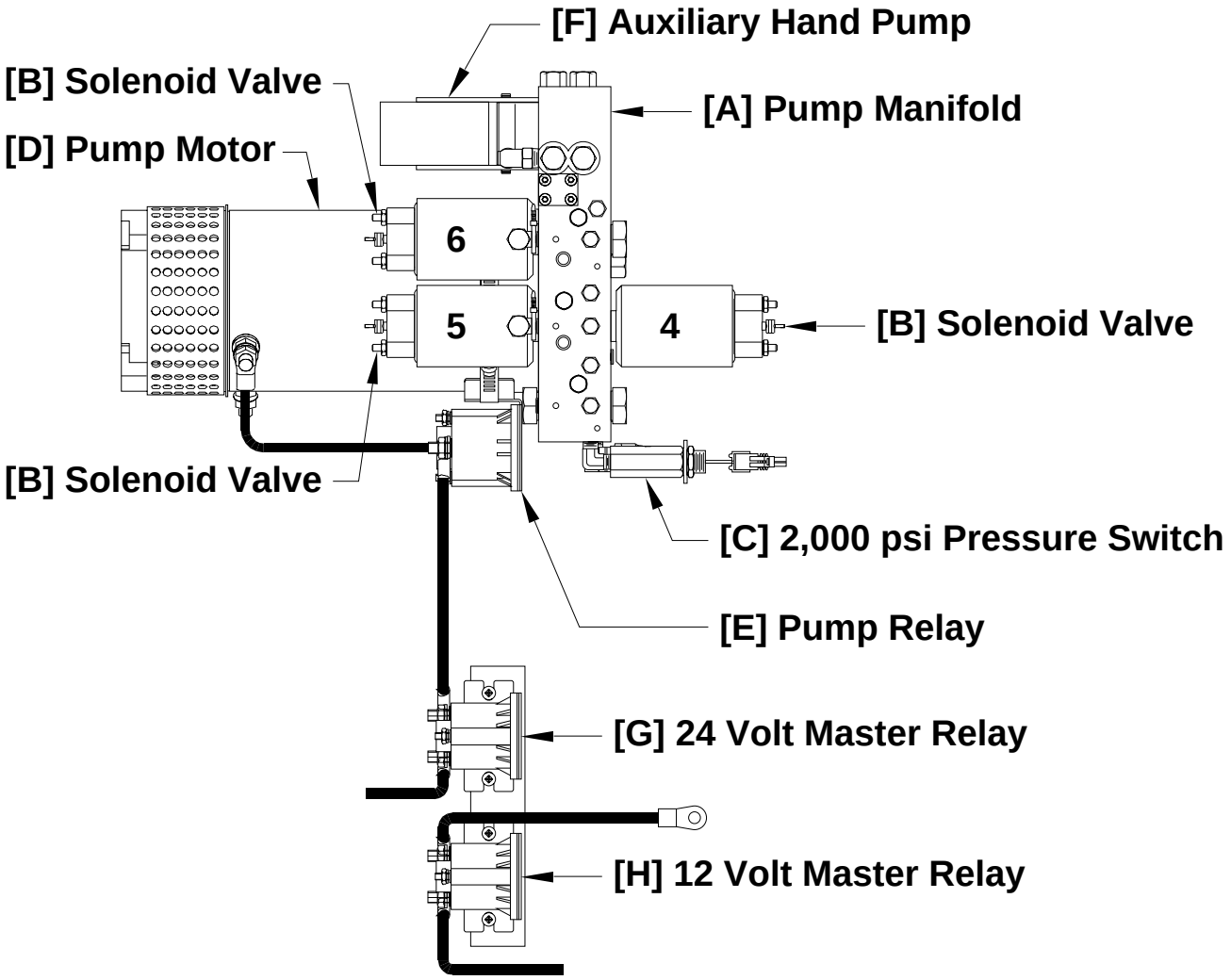

TOP VIEW
Manifold - Motor - Relays - Pressure Switch

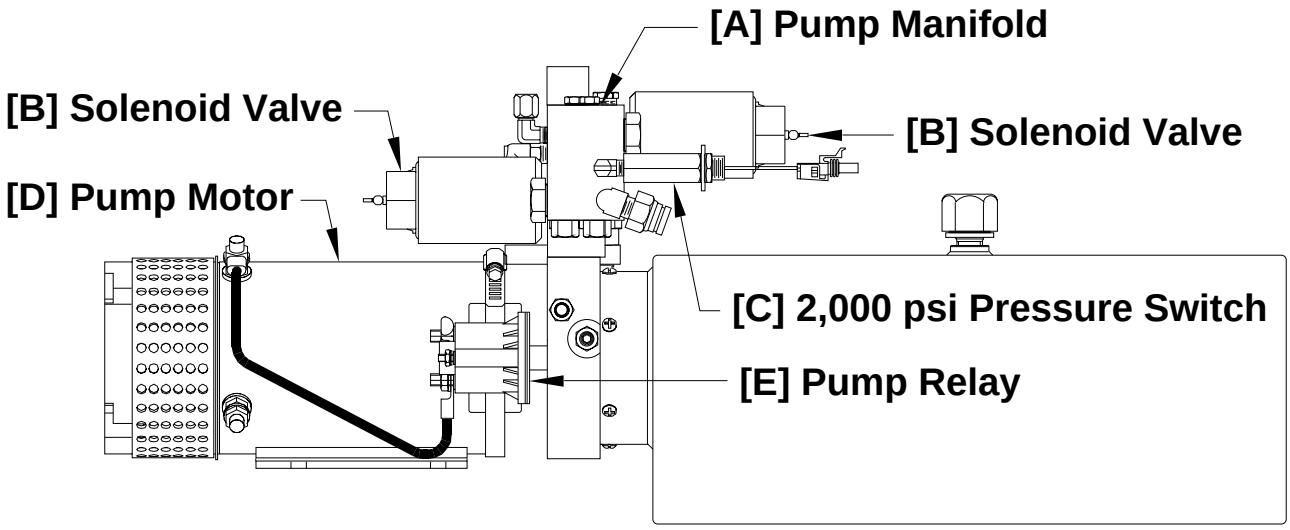

SIDE VIEW

Fig. 2

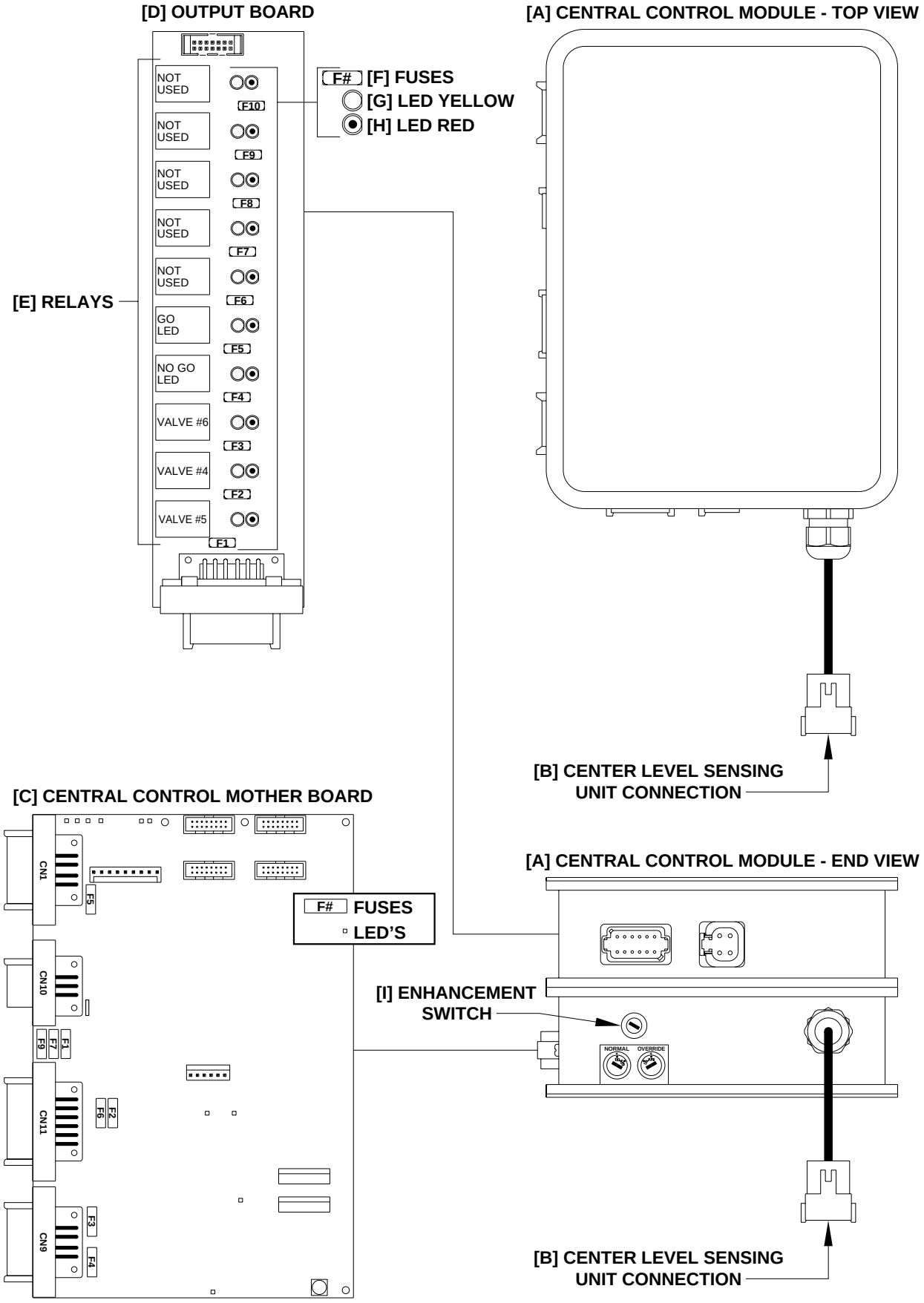
[D] OUTPUT BOARD
[A] CENTRAL CONTROL MODULE - TOP VIEW
NOT USED
NOT USED
NOT USED
NOT USED
NOT USED
GO LED
NO GO LED
VALVE #6
VALVE #4
VALVE #5
F10
F9
F8
F7
F6
F5
F4
F3
F2
F1
F#
[F] FUSES
[G] LED YELLOW
[H] LED RED
[E] RELAYS
[B] CENTER LEVEL SENSING UNIT CONNECTION
[C] CENTRAL CONTROL MOTHER BOARD
CN1
CN10
CN11
CN9
F5
F9
F7
F1
F6
F2
F3
F4
F#
FUSES
LED'S
[A] CENTRAL CONTROL MODULE - END VIEW
[I] ENHANCEMENT SWITCH
NORMAL
OVERRIDE
[B] CENTER LEVEL SENSING UNIT CONNECTION

Fig. 3

TOP VIEW
[A] Sensing Unit Adjustment Assembly

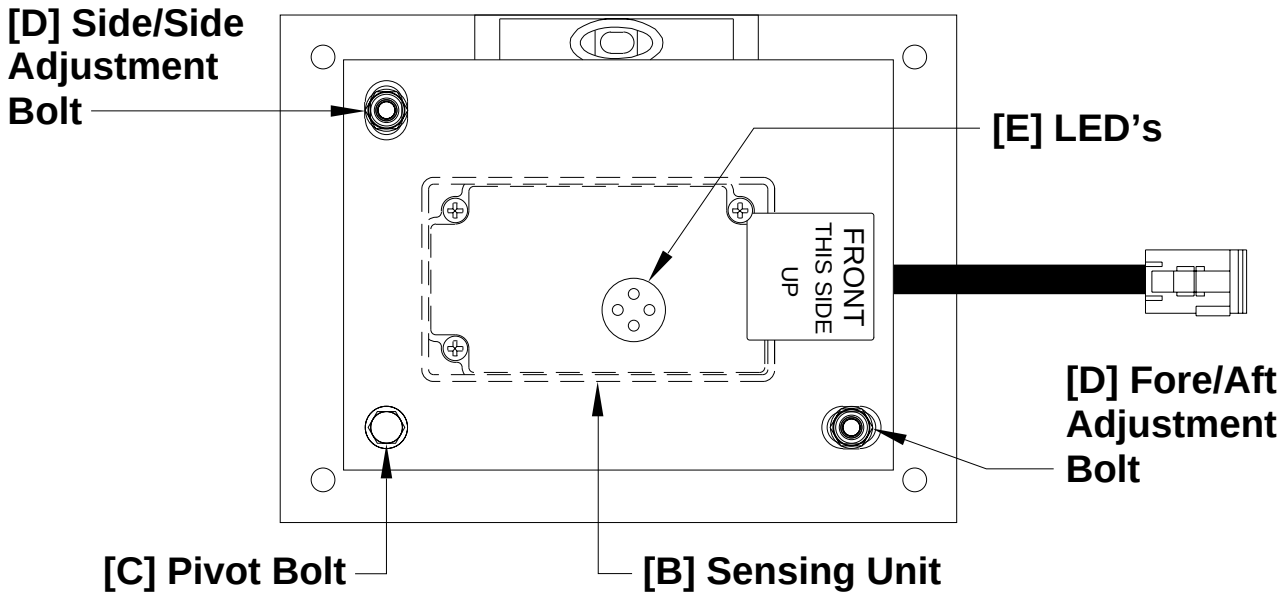

SIDE VIEW
[A] Level Sensing Unit Assembly

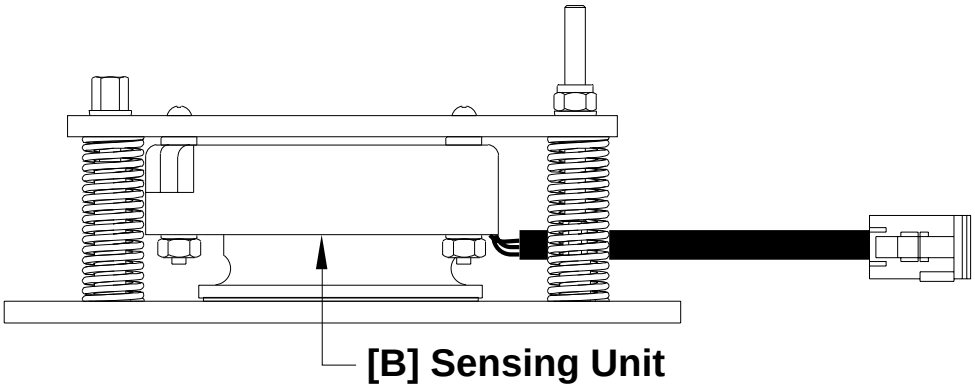

END VIEW
[A] Level Sensing Unit Assembly

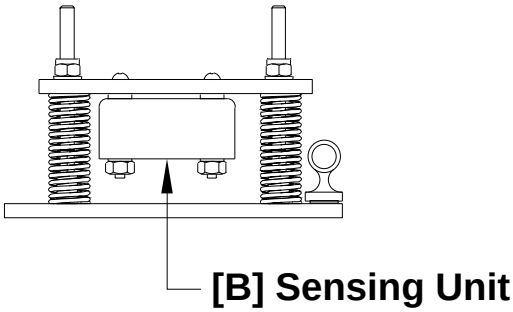

Fig. 4

Touch Panel Information

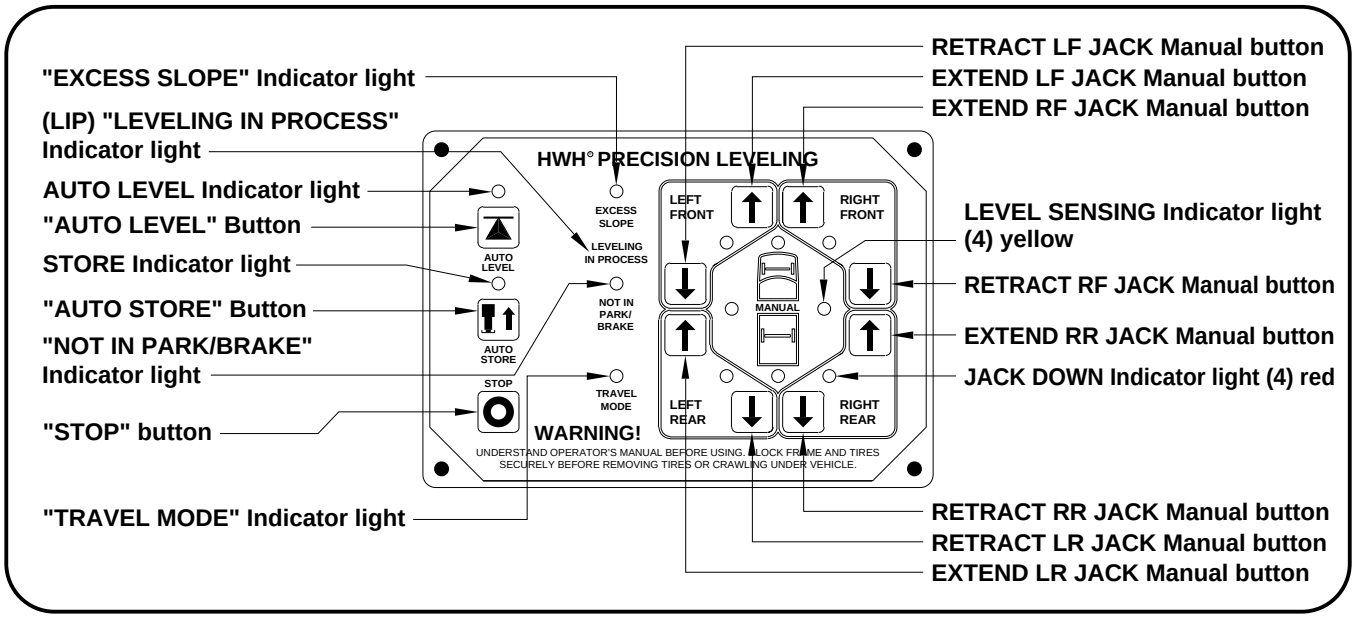

Fig. 5