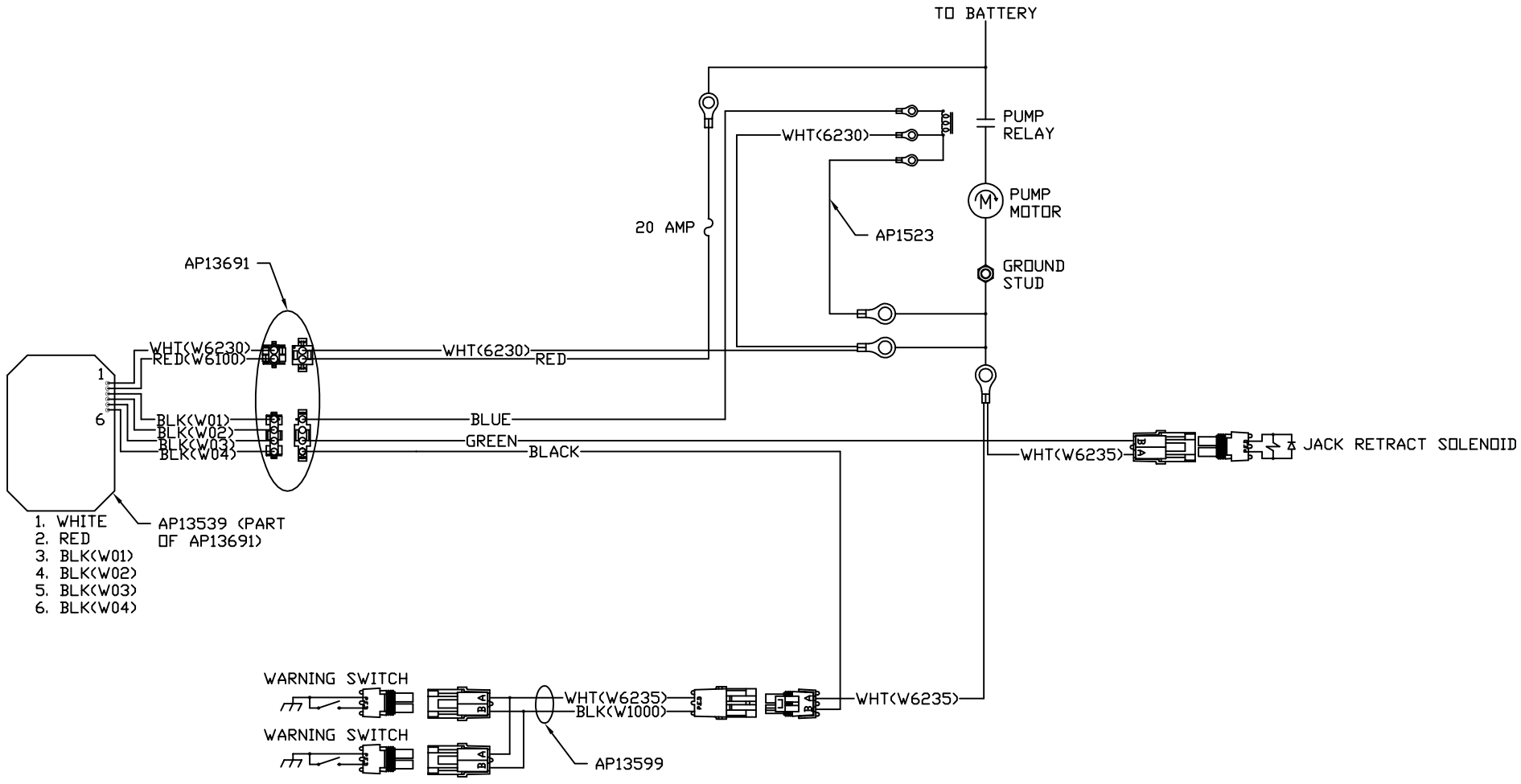

NO.	DATE	REVISION
2	06MAY08	REDRAWN TO 1:3 SCALE
1	24MAY99	UPDATED TO NEW STDRDS

THE INFORMATION DISCLOSED ON THIS DRAWING IS CONFIDENTIAL AND MUST NOT BE DISCLOSED OR USED IN ANY MANNER WHICH WILL BE DETRIMENTAL TO THE HWH CORPORATION

HWH

I-80 EXIT 267 SOUTH
RT 1 MOSCOW, IOWA 52760

SCALE 1:3 | DATE 31MAR98 | DRAWN BY .

SYSTEM SCEMATIC ELEC

DRAWING NUMBER
MP881870

NOTE: INSTALLATION MUST CONFORM TO GOOD SHOP PRACTICES, SAE STANDARDS, RVIA STANDARDS, AND OTHER APPLICABLE STANDARDS.