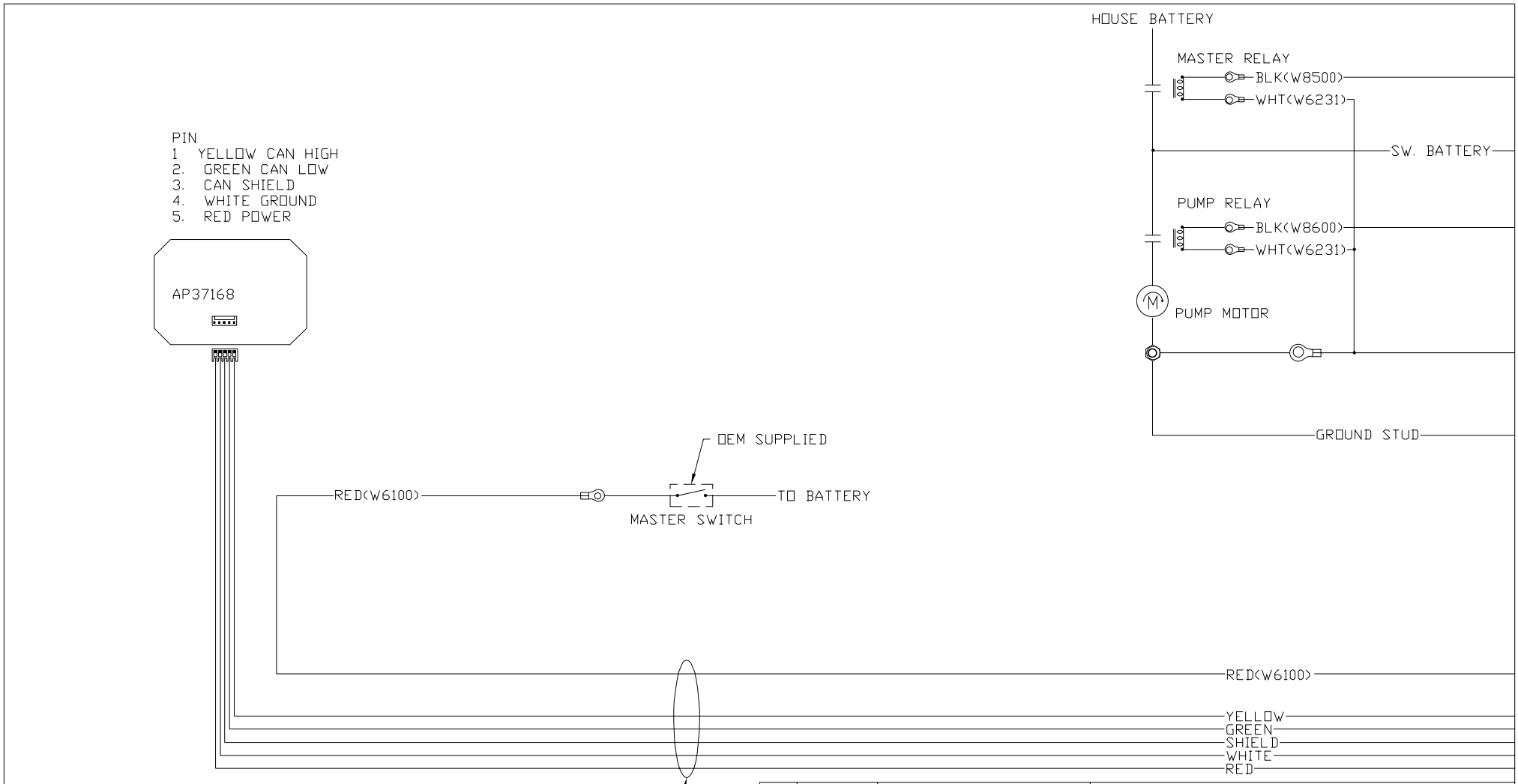

NO.	DATE	REVISION

HWH

I-80 EXIT 267 SOUTH
RT 1 MOSCOW, IOWA 52760

SCALE 1:3 | DATE 01JUN12 | DRAWN BY .

SYSTEM SCHEMATIC ELEC

DRAWING NUMBER
MP90795 A/D

NOTE: INSTALLATION MUST CONFORM TO GOOD SHOP PRACTICES, SAE STANDARDS, RVIA STANDARDS, AND OTHER APPLICABLE STANDARDS.

THE INFORMATION DISCLOSED ON THIS DRAWING IS CONFIDENTIAL AND MUST NOT BE DISCLOSED OR USED IN ANY MANNER WHICH WILL BE DETRIMENTAL TO THE HWH CORPORATION

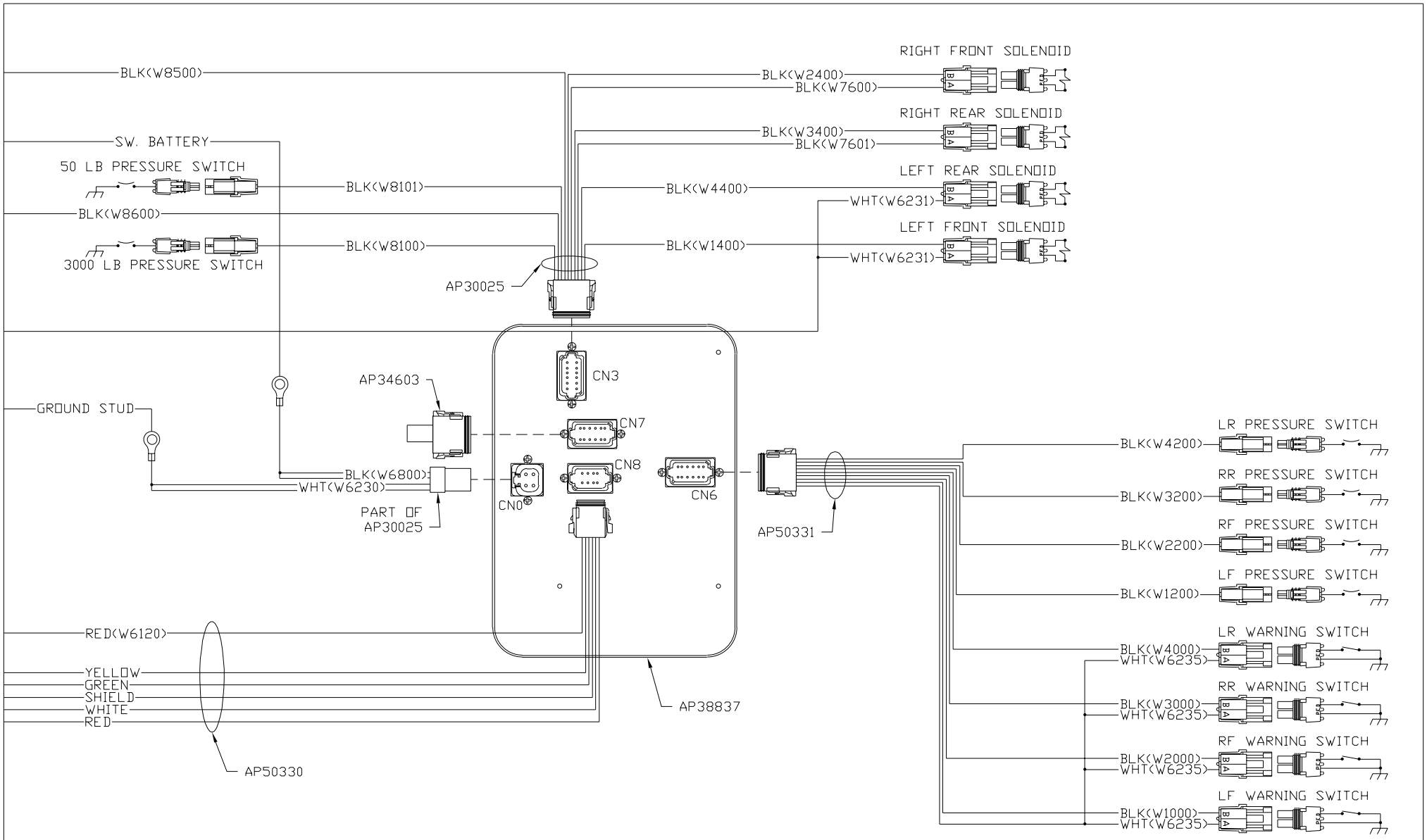

NOTE: INSTALLATION MUST CONFORM TO GOOD SHOP PRACTICES, SAE STANDARDS, RVIA STANDARDS, AND OTHER APPLICABLE STANDARDS.

MP90795 B
01JUN12

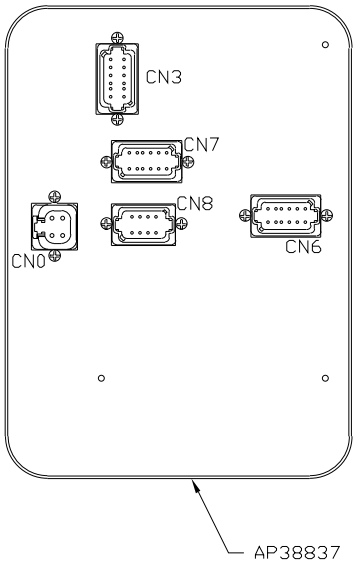

CN3 (BROWN)
PIN
1 BLK(W8500) MASTER RELAY CONTROL
2 BLK(W8100) 3000 LB PRESS SW
3 BLK(W8101) 50 LB PRESS SW
4 N/C
5 BLK(W1400) LF SOLENOID
6 BLK(W7600) CRX 1
7 BLK(W7601) CRX 2
8 BLK(W4400) LR SOLENOID
9 BLK(W3400) RR SOLENOID
10 BLK(W2400) RF SOLENOID
11 N/C
12 BLK(W8600) PUMP RELAY CONTROL

CN7 (BLACK)
PIN
1 N/C
2 N/C
3 N/C
4 N/C
5 BLK(W9000) PARK BRAKE
6 N/C
7 BLK(W9000) PARK BRAKE
8 N/C
9 N/C
10 N/C
11 N/C
12 N/C

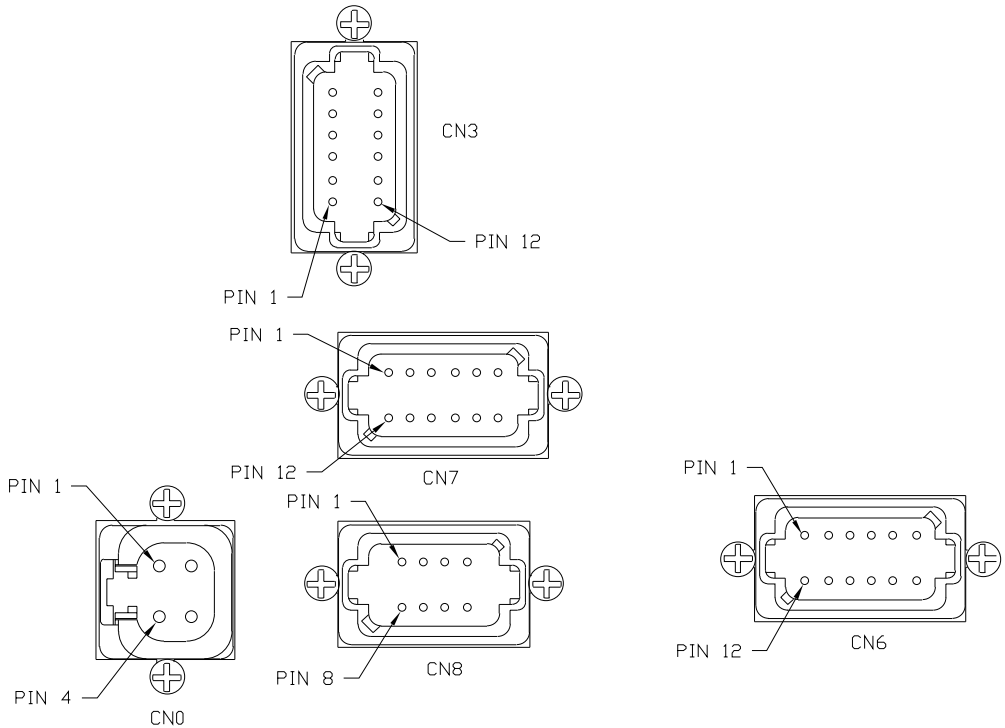

NOTE: WIRE NUMBERS ON THIS SHEET ARE REFERENCED TO HARNESS PLUGS.

CN0 (GRAY)
PIN
1 BLK(W6800) SW BATT
2 BLK(W6800) SW BATT
3 WHT(W6230) GROUND
4 WHT(W6230) GROUND

CN8 (BLACK)
PIN
1 N/C
2 N/C
3 RED POWER TO TOUCH PANEL
4 WHITE GROUND
5 CAN SHIELD
6 RED(W6100) BATTERY
7 GREEN
8 YELLOW

CN6 (GRAY)
PIN
1 N/C
2 N/C
3 BLK(W1000) LF WARN SW
4 BLK(W2000) RF WARN SW
5 BLK(W1200) LF PRESS SW
6 BLK(W2200) RF PRESS SW
7 BLK(W3200) RR PRESS SW
8 BLK(W4200) LR PRESS SW
9 BLK(W3000) RR WARN SW
10 BLK(W4000) LR WARN SW
11 N/C
12 WHT(W6235) GROUND

NOTE: INSTALLATION MUST CONFORM TO GOOD SHOP PRACTICES, SAE STANDARDS, RVIA STANDARDS, AND OTHER APPLICABLE STANDARDS.

MP90795 C
01JUN12

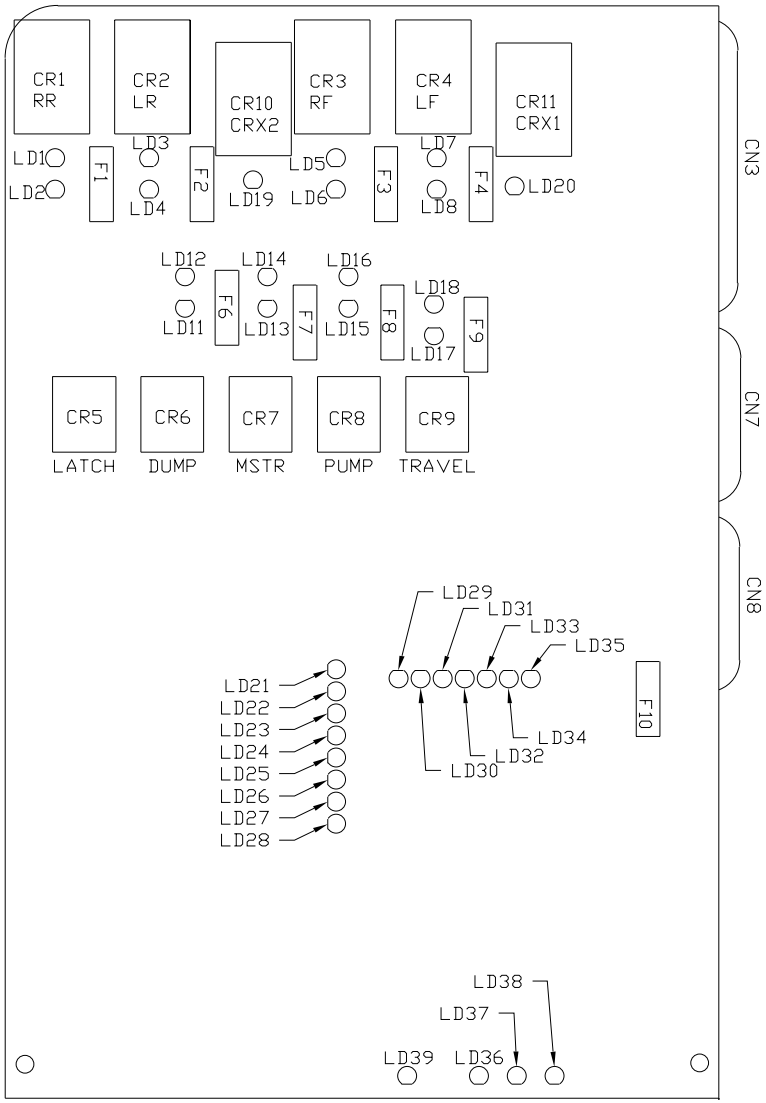

LED #	COLOR	DESCRIPTION
LED 1	YELLOW	RR COIL
LED 2	RED	RR CONTACT
LED 3	YELLOW	LR COIL
LED 4	RED	LR CONTACT
LED 5	YELLOW	RF COIL
LED 6	RED	RF CONTACT
LED 7	YELLOW	LF COIL
LED 8	RED	LF CONTACT
LED 11	YELLOW	DUMP COIL
LED 12	RED	DUMP CONTACT
LED 13	YELLOW	MASTER RELAY COIL
LED 14	RED	MASTER RELAY CONTACT
LED 15	YELLOW	PUMP COIL
LED 16	RED	PUMP CONTACT
LED 17	YELLOW	TRAVEL COIL
LED 18	RED	TRAVEL CONTACT
LED 19	YELLOW	CRX 2
LED 20	YELLOW	CRX 1
LED 21	YELLOW	LF WARN SW
LED 22	YELLOW	RF WARN SW
LED 23	YELLOW	RR WARN SW
LED 24	YELLOW	LR WARN SW
LED 25	RED	LF PRESS SW
LED 26	RED	RF PRESS SW
LED 27	RED	RR PRESS SW
LED 28	RED	LR PRESS SW
LED 29	RED	NOT USED
LED 30	YELLOW	NOT USED
LED 31	GREEN	3000 LB PSW INPUT
LED 32	RED	MASTER WARNING CONTROL
LED 33	GREEN	50 LB PSW INPUT
LED 34	RED	JACK INTERRUPT
LED 35	RED	PARK BRAKE
LED 36	RED	BOARD ENABLED
LED 37	RED	ACCESSORY IN
LED 38	RED	ACCESSORY OUT
LED 39	RED	LINK LIGHT

FUSE	RATING	DESCRIPTION
F1	15 AMP	RR OUTPUT
F2	15 AMP	LR OUTPUT
F3	15 AMP	RF OUTPUT
F4	15 AMP	LF OUTPUT
F6	5 AMP	DUMP OUTPUT
F7	5 AMP	MASTER OUTPUT
F8	5 AMP	PUMP OUTPUT
F9	5 AMP	TRAVEL OUTPUT
F10	10 AMP	ACC INPUT

NOTE: INSTALLATION MUST CONFORM TO GOOD SHOP PRACTICES, SAE STANDARDS, RVIA STANDARDS, AND OTHER APPLICABLE STANDARDS.

MP90795 D
01JUN12