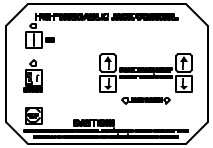

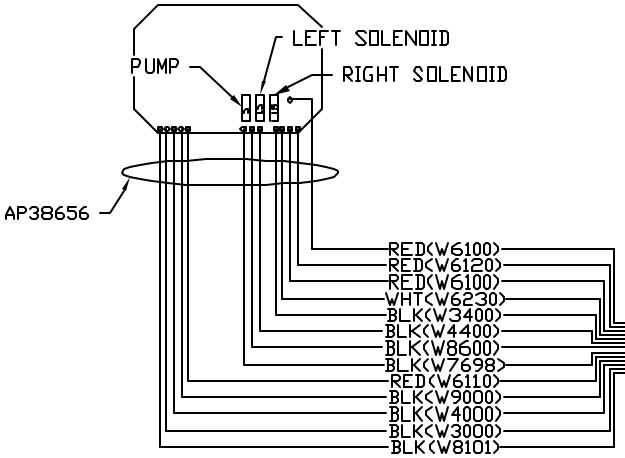

NOTE: PINS NOT NOTED ARE UNUSED

PIN
1. BLK(W8600) PUMP CONTROL
2. BLK(W7698) WARN/BUZZER CONTROL
3. BLK(W3000) RR WARNING SWITCH
4. BLK(W4400) LR SOLENOID VALVE
5. BLK(W3400) RR SOLENOID VALVE
6. BLK(W4000) LR WARNING SWITCH
7. WHT(W6230) GROUND
8. RED(W6100) BATTERY
9. RED(W6100) BATTERY
10. BLK(W8101) 50 LB PRESS SWITCH
11. BLK(W9000) PARK BRAKE
12. RED(W6110) IGNITION
13. RED(W6120) ACCESSORY

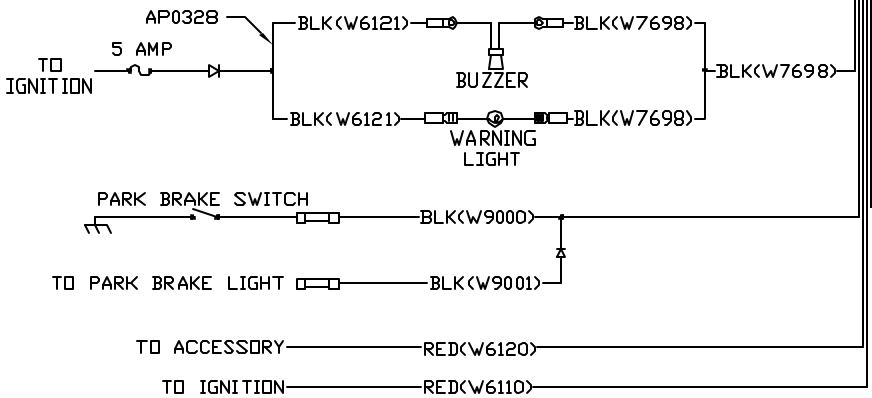

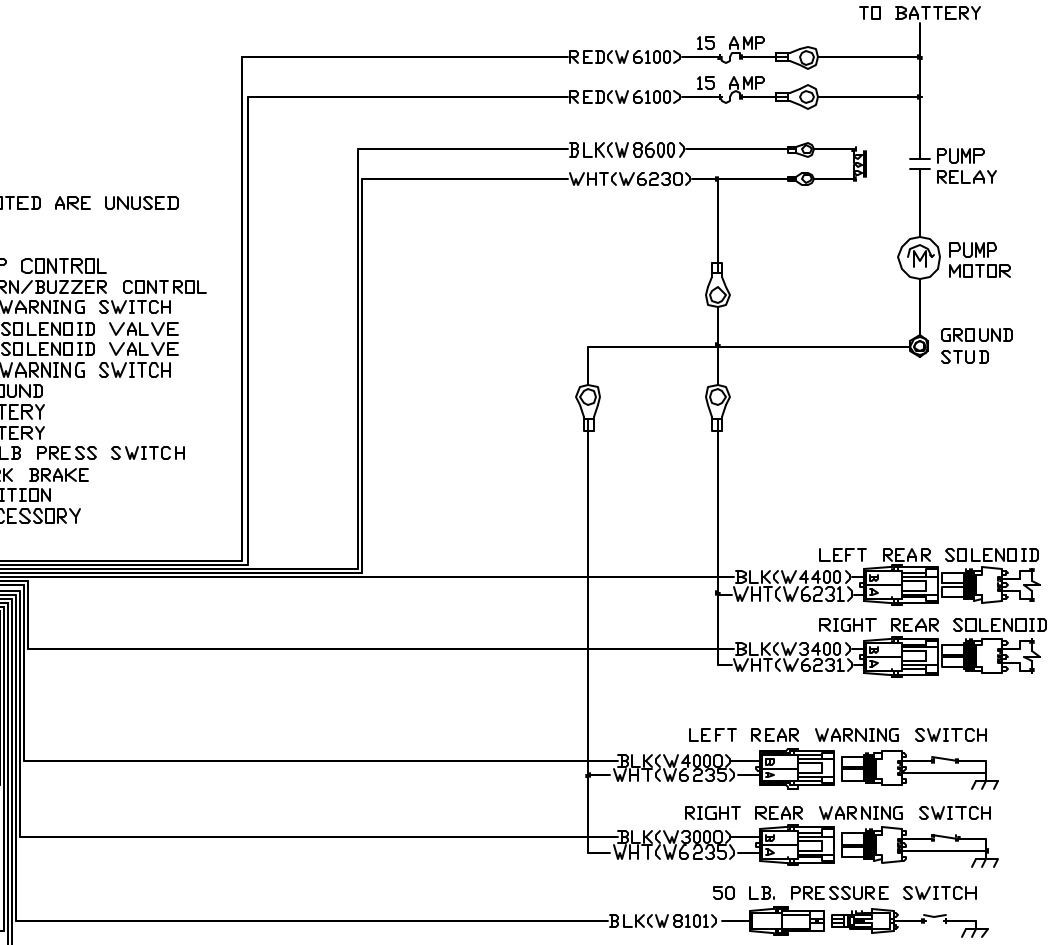

NOTE: INSTALLATION MUST CONFORM TO GOOD SHOP PRACTICES, SAE STANDARDS, RVIA STANDARDS, AND OTHER APPLICABLE STANDARDS.

NO.	DATE	REVISION

THE INFORMATION DISCLOSED ON THIS DRAWING IS CONFIDENTIAL AND MUST NOT BE DISCLOSED OR USED IN ANY MANNER WHICH WILL BE DETRIMENTAL TO THE HWH CORPORATION

HWH
I-80 EXIT 267 SOUTH
RT 1 MOSCOW, IOWA 52760

SCALE 1:3 | DATE 15JAN15 | DRAWN BY .

SYSTEM SCHEMATIC ELEC

DRAWING NUMBER
MP910940