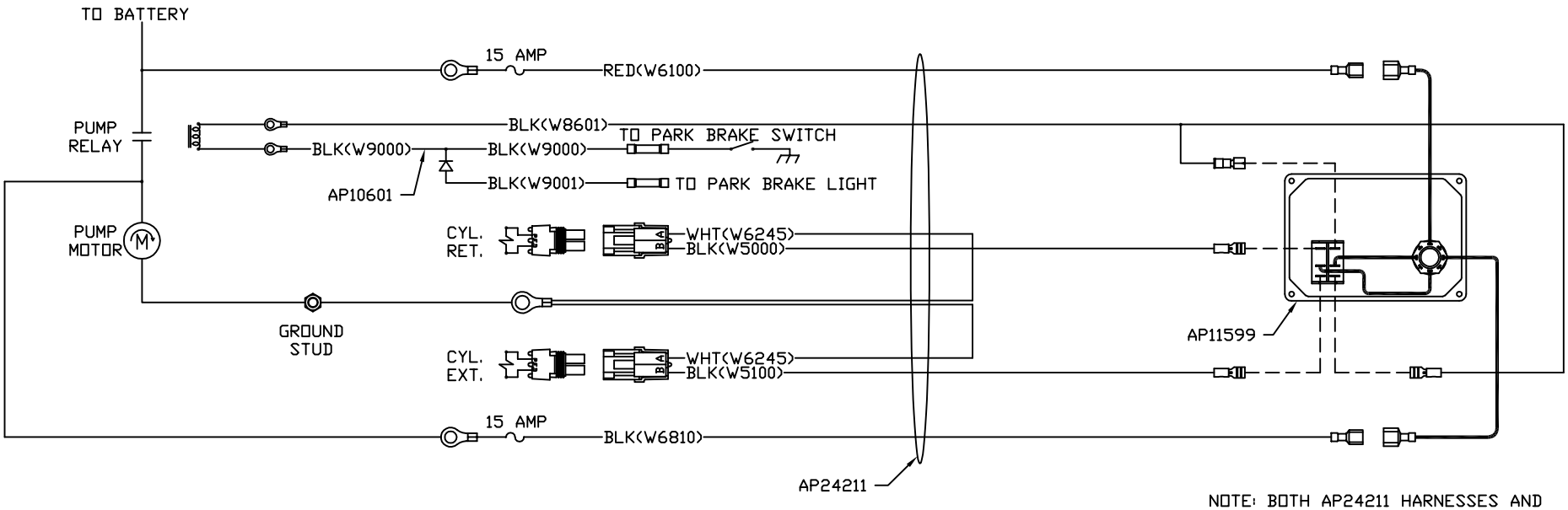

NOTE: BOTH AP24211 HARNESSES AND AP11599 ROOM EXTENSION PANELS ARE CONNECTED IN THE SAME MANNER IF AP42297 TWO ROOM CONTROL PACKAGE IS USED.

NOTE: INSTALLATION MUST CONFORM TO GOOD SHOP PRACTICES, SAE STANDARDS, RVIA STANDARDS, AND OTHER APPLICABLE STANDARDS.

RM KIT/USO: AP60733	NO.	DATE	REVISION
CTRL PKG/1RM: AP42295			
CTRL PKG/2RM: AP42297			

THE INFORMATION DISCLOSED ON THIS DRAWING IS CONFIDENTIAL AND MUST NOT BE DISCLOSED OR USED IN ANY MANNER WHICH WILL BE DETRIMENTAL TO THE HWH CORPORATION

HWH
I-80 EXIT 267 SOUTH
RT 1 MOSCOW, IOWA 52760

SCALE 1:3 | DATE 30OCT19 | DRAWN BY .

SYSTEM SCHEMATIC ELEC

DRAWING NUMBER MP91503