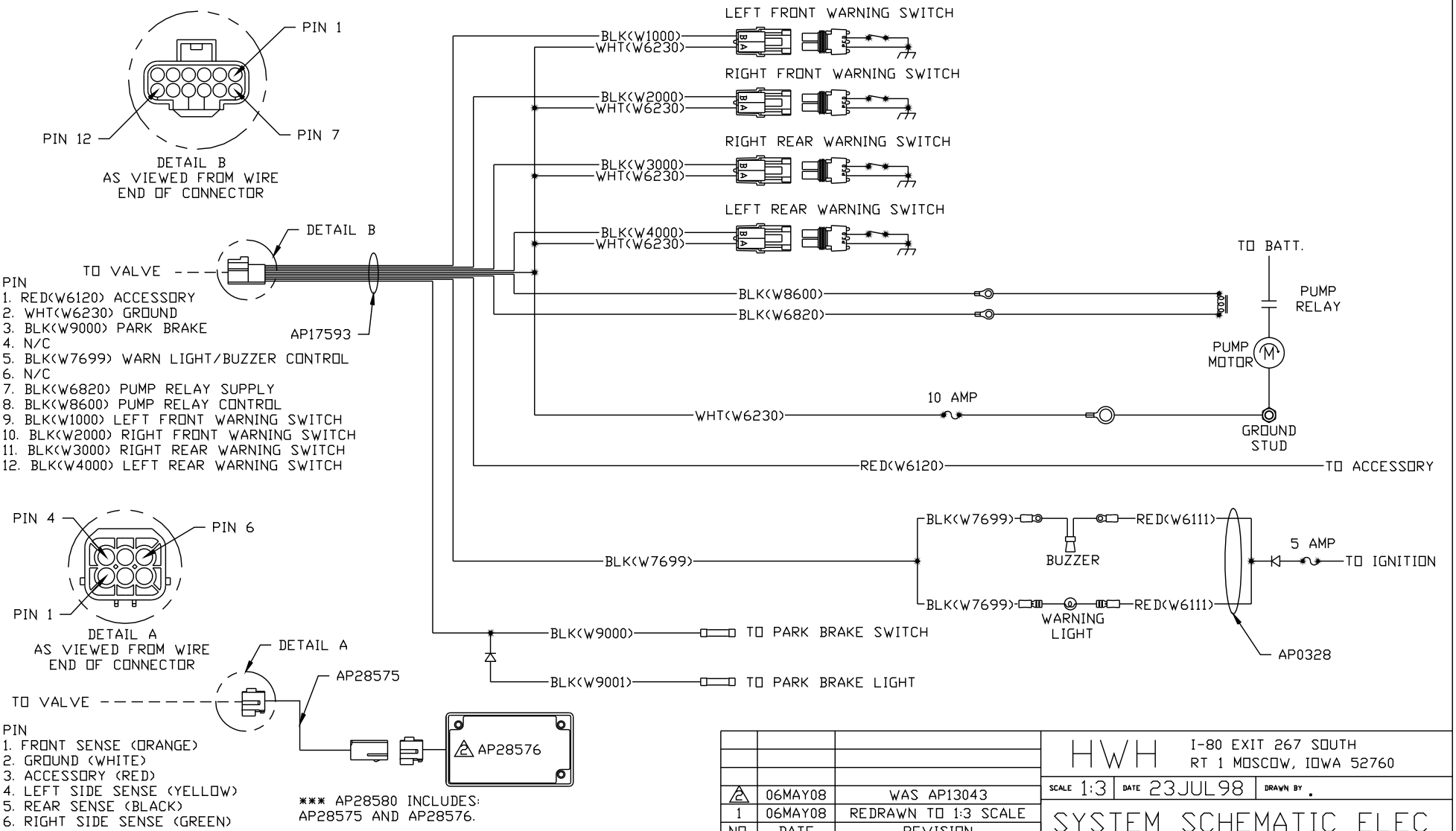

NOTE: INSTALLATION MUST CONFORM TO GOOD SHOP PRACTICES, SAE STANDARDS, RVIA STANDARDS, AND OTHER APPLICABLE STANDARDS.

NO.	DATE	REVISION
2	06MAY08	WAS AP13043
1	06MAY08	REDRAWN TO 1:3 SCALE

THE INFORMATION DISCLOSED ON THIS DRAWING IS CONFIDENTIAL AND MUST NOT BE DISCLOSED OR USED IN ANY MANNER WHICH WILL BE DETRIMENTAL TO THE HWH CORPORATION

HWH
I-80 EXIT 267 SOUTH
RT 1 MOSCOW, IOWA 52760

SCALE 1:3 | DATE 23JUL98 | DRAWN BY .

SYSTEM SCHEMATIC ELEC

DRAWING NUMBER
MP882740