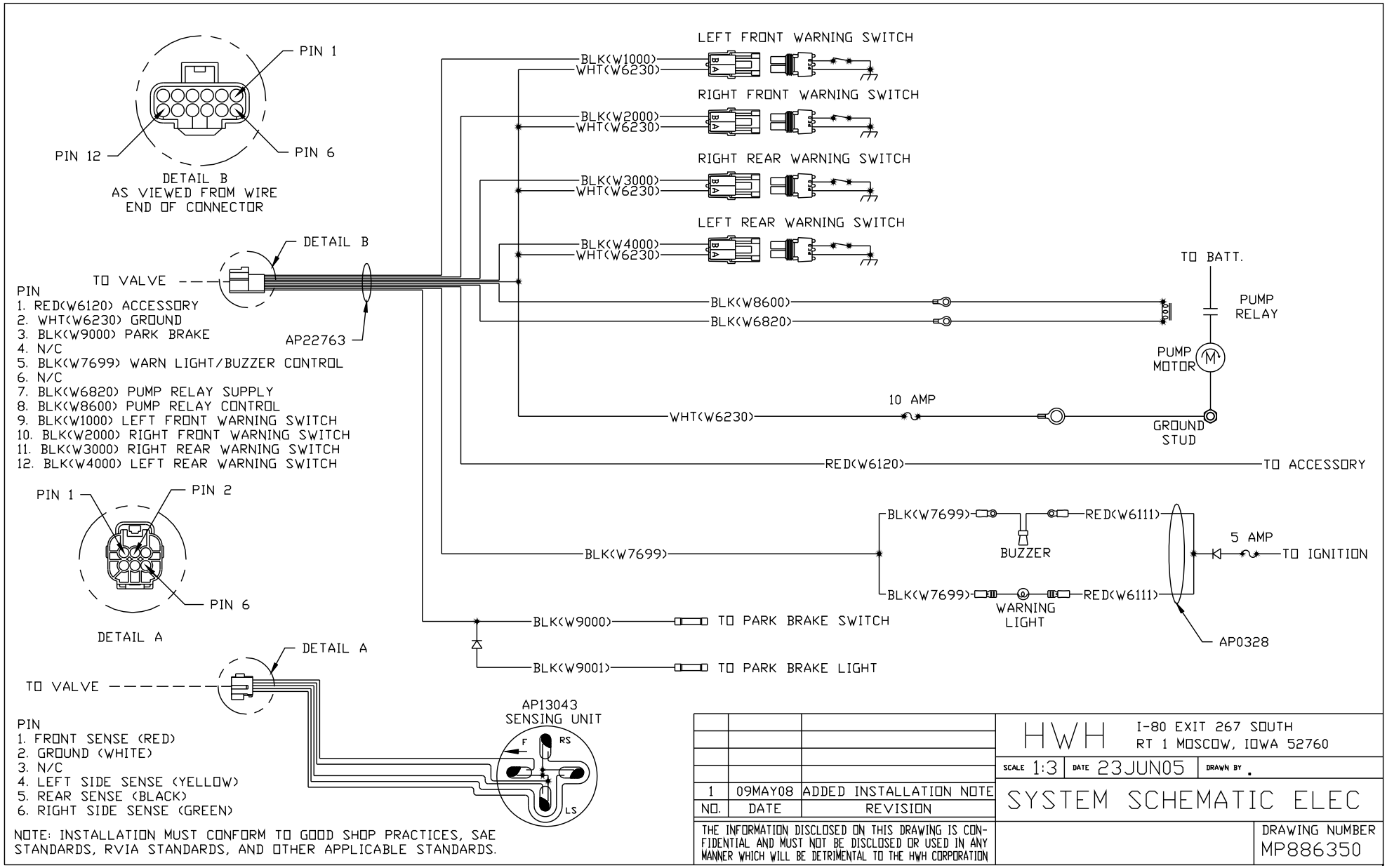

NOTE: INSTALLATION MUST CONFORM TO GOOD SHOP PRACTICES, SAE STANDARDS, RVIA STANDARDS, AND OTHER APPLICABLE STANDARDS.

NO.	DATE	REVISION
1	09MAY08	ADDED INSTALLATION NOTE

THE INFORMATION DISCLOSED ON THIS DRAWING IS CONFIDENTIAL AND MUST NOT BE DISCLOSED OR USED IN ANY MANNER WHICH WILL BE DETRIMENTAL TO THE HWH CORPORATION

HWH

I-80 EXIT 267 SOUTH
RT 1 MOSCOW, IOWA 52760

SCALE 1:3 | DATE 23JUN05 | DRAWN BY .

SYSTEM SCHEMATIC ELEC

DRAWING NUMBER
MP886350