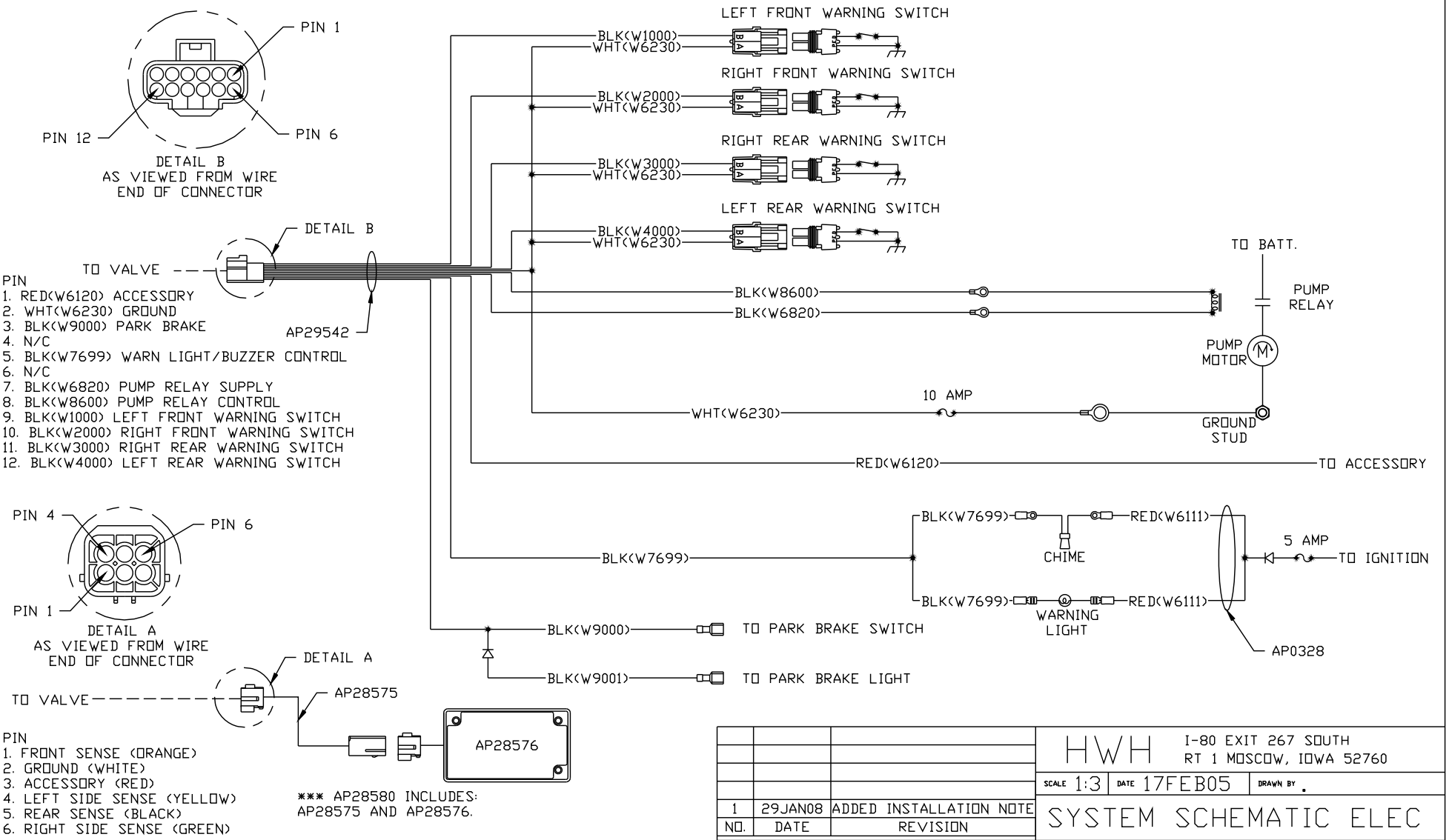
PIN 1
PIN 12
PIN 6
DETAIL B
AS VIEWED FROM WIRE
END OF CONNECTOR
DETAIL B
TO VALVE
AP29542
PIN
1. RED(W6120) ACCESSORY
2. WHT(W6230) GROUND
3. BLK(W9000) PARK BRAKE
4. N/C
5. BLK(W7699) WARN LIGHT/BUZZER CONTROL
6. N/C
7. BLK(W6820) PUMP RELAY SUPPLY
8. BLK(W8600) PUMP RELAY CONTROL
9. BLK(W1000) LEFT FRONT WARNING SWITCH
10. BLK(W2000) RIGHT FRONT WARNING SWITCH
11. BLK(W3000) RIGHT REAR WARNING SWITCH
12. BLK(W4000) LEFT REAR WARNING SWITCH
LEFT FRONT WARNING SWITCH
BLK(W1000)
WHT(W6230)
RIGHT FRONT WARNING SWITCH
BLK(W2000)
WHT(W6230)
RIGHT REAR WARNING SWITCH
BLK(W3000)
WHT(W6230)
LEFT REAR WARNING SWITCH
BLK(W4000)
WHT(W6230)
TO BATT.
PUMP RELAY
BLK(W8600)
BLK(W6820)
PUMP MOTOR
10 AMP
WHT(W6230)
GROUND STUD
RED(W6120)
TO ACCESSORY
PIN 4
PIN 6
PIN 1
DETAIL A
AS VIEWED FROM WIRE
END OF CONNECTOR
BLK(W7699)
BLK(W7699)
RED(W6111)
CHIME
5 AMP
TO IGNITION
BLK(W7699)
WARNING LIGHT
RED(W6111)
AP0328
BLK(W9000)
TO PARK BRAKE SWITCH
BLK(W9001)
TO PARK BRAKE LIGHT
DETAIL A
TO VALVE
AP28575
AP28576
PIN
1. FRONT SENSE (ORANGE)
2. GROUND (WHITE)
3. ACCESSORY (RED)
4. LEFT SIDE SENSE (YELLOW)
5. REAR SENSE (BLACK)
6. RIGHT SIDE SENSE (GREEN)
*** AP28580 INCLUDES:
AP28575 AND AP28576.
NOTE: INSTALLATION MUST CONFORM TO GOOD SHOP PRACTICES, SAE STANDARDS, RVIA STANDARDS, AND OTHER APPLICABLE STANDARDS.
1 29JAN08 ADDED INSTALLATION NOTE
NO. DATE REVISION
THE INFORMATION DISCLOSED ON THIS DRAWING IS CONFIDENTIAL AND MUST NOT BE DISCLOSED OR USED IN ANY MANNER WHICH WILL BE DETRIMENTAL TO THE HWH CORPORATION
HWH
I-80 EXIT 267 SOUTH
RT 1 MOSCOW, IOWA 52760
SCALE 1:3
DATE 17FEB05
DRAWN BY
SYSTEM SCHEMATIC ELEC
DRAWING NUMBER
MP894260