# HYDRAULIC SCHEMATIC DIAGRAM
# PRECISION LEVELING WITH HAND PUMP
# 4 - POWER EXTEND / POWER RETRACT JACKS

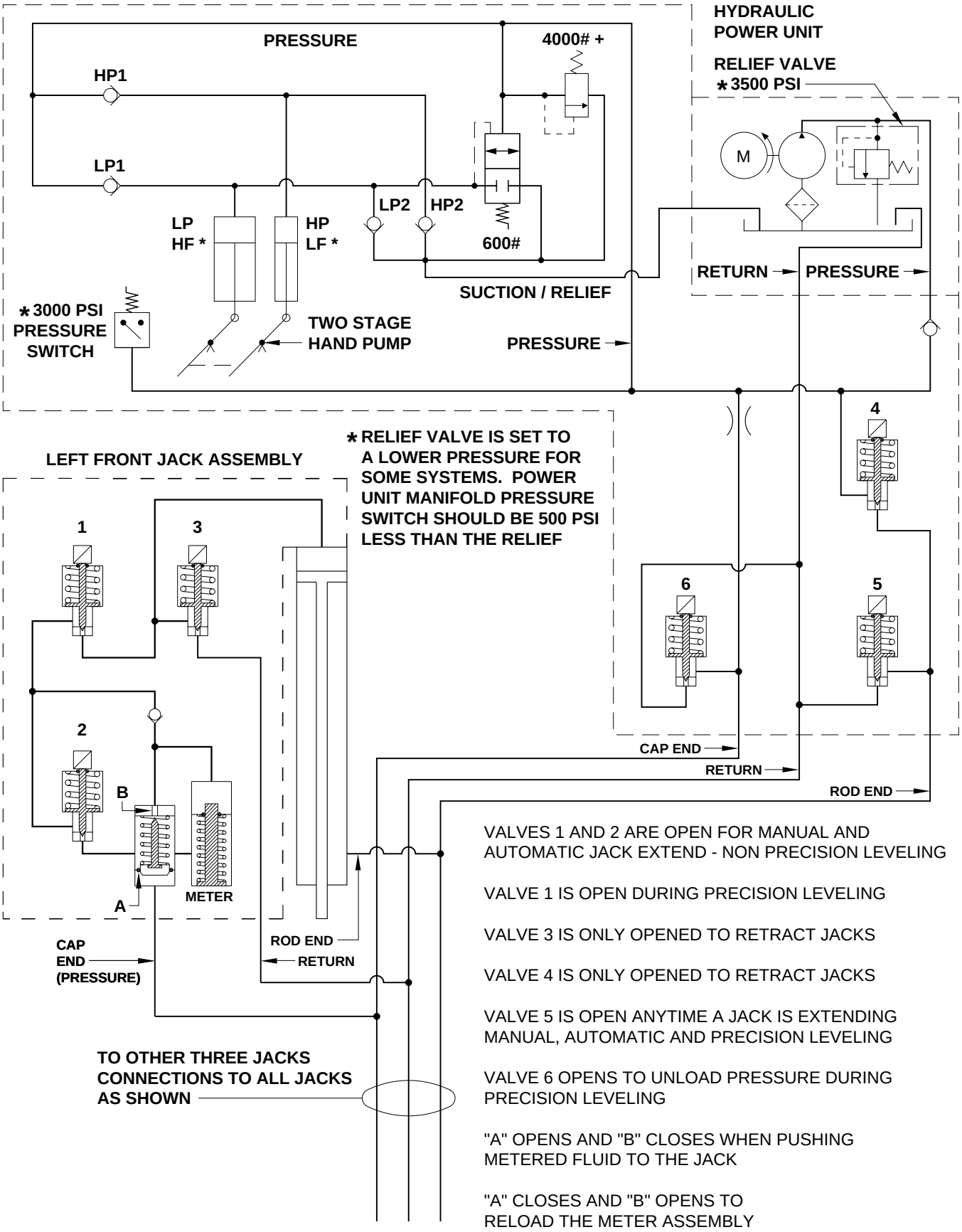


VALVES 1 AND 2 ARE OPEN FOR MANUAL AND AUTOMATIC JACK EXTEND - NON PRECISION LEVELING

VALVE 1 IS OPEN DURING PRECISION LEVELING

VALVE 3 IS ONLY OPENED TO RETRACT JACKS

VALVE 4 IS ONLY OPENED TO RETRACT JACKS

VALVE 5 IS OPEN ANYTIME A JACK IS EXTENDING MANUAL, AUTOMATIC AND PRECISION LEVELING

VALVE 6 OPENS TO UNLOAD PRESSURE DURING PRECISION LEVELING

"A" OPENS AND "B" CLOSES WHEN PUSHING METERED FLUID TO THE JACK

"A" CLOSES AND "B" OPENS TO RELOAD THE METER ASSEMBLY