Ⓐ HOSE ASSY 04
PRESSURE

Ⓑ .375" OD NYLON TUBING
RETURN

Ⓒ HOSE ASSY 03
ROD END - ALWAYS PRESSURIZED
HOSES MUST BE HIGH PRESSURE
AND OF EQUAL LENGTH AND DIAMETER

Ⓓ HOSE ASSY 04
CAP END - HOSES MUST MAINTAIN
EQUAL LENGTH AND DIAMETER

Ⓘ AP HOSE ASSY 04
CAP END (LIFT) WAS AP4060

Ⓙ HOSE ASSY 04
CAP END (ROOM)

Ⓚ HOSE ASSY 03
CAP END (ROOM)

Ⓛ HOSE ASSY 03
ROD END (LIFT) ALWAYS PRESSURIZED

Ⓜ HOSE ASSY 04
CAP END (LIFT)

Ⓝ HOSE ASSY 03
ROD END (LIFT) ALWAYS PRESSURIZED

Ⓞ HOSE ASSY
ROD END (LIFT) ALWAYS PRESSURIZED

Ⓟ HOSE ASSY 04
CAP END (LIFT)

Ⓠ HOSE ASSY 03
ROD END (LIFT) ALWAYS PRESSURIZED

Ⓡ HOSE ASSY 04
CAP END (LIFT)

Ⓢ HOSE ASSY 03
ROD END (LIFT)
ALWAYS PRESSURIZED

Ⓣ HOSE ASSY 04
CAP END (LIFT)

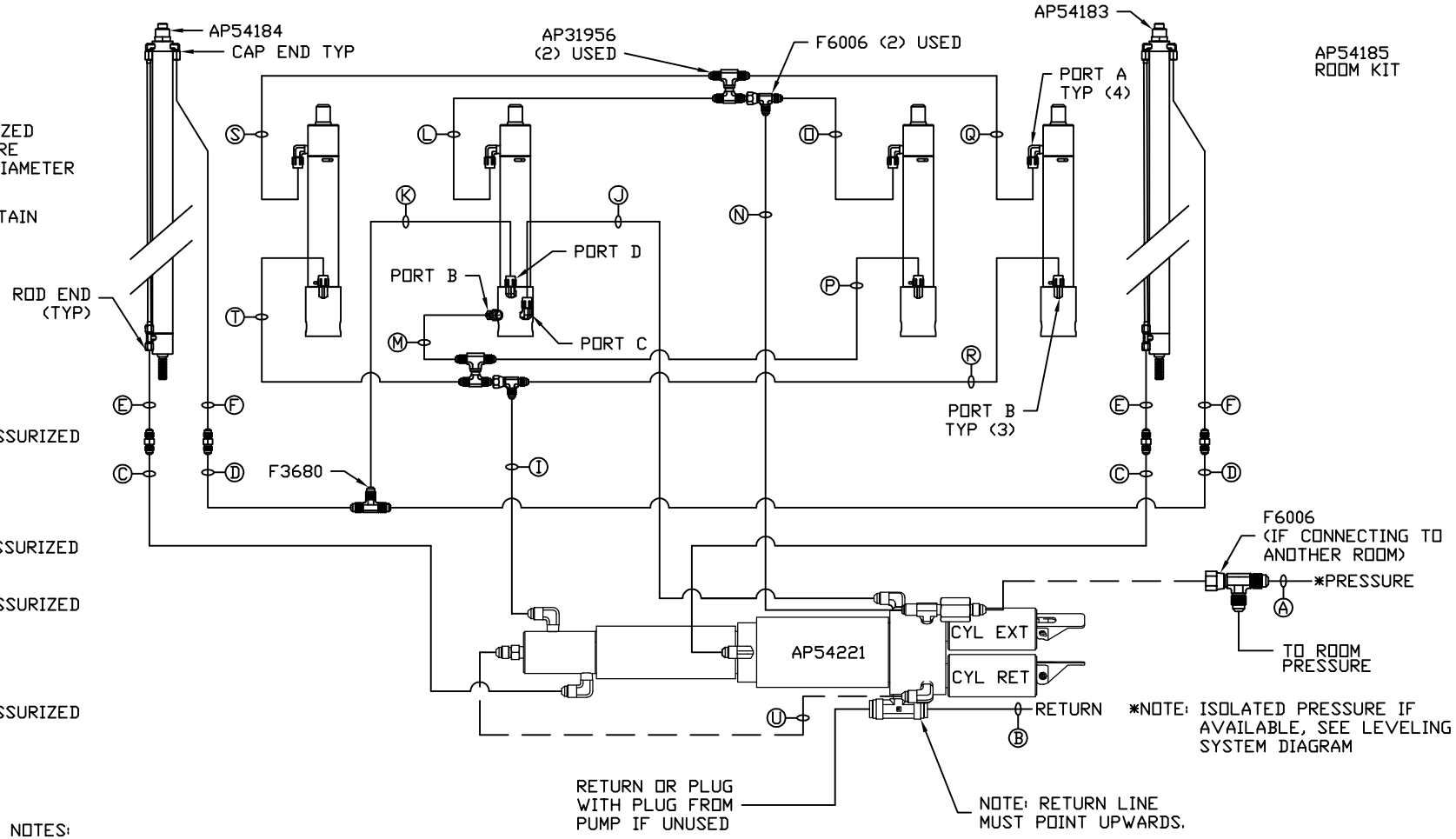

NOTES:

FOR CONNECTION CLARITY ONLY THE CYLINDERS ARE SHOWN.

HOSE Ⓤ IS INCLUDED WITH THE SYNC. CYLINDER.

NOTE: INSTALLATION MUST CONFORM TO GOOD SHOP PRACTICES, SAE STANDARDS, RVIA STANDARDS, AND OTHER APPLICABLE STANDARDS.

NO.	DATE	REVISION

THE INFORMATION DISCLOSED ON THIS DRAWING IS CONFIDENTIAL AND MUST NOT BE DISCLOSED OR USED IN ANY MANNER WHICH WILL BE DETRIMENTAL TO THE HWH CORPORATION

HWH
I-80 EXIT 267 SOUTH
RT 1 MOSCOW, IOWA 52760

SCALE 1:6 | DATE 30JAN17 | DRAWN BY .

HYD CONN DIAGRAM

NEWMAR

DRAWING NUMBER
MP71056