ELECTRICAL SCHEMATIC

200 SERIES LEVELING SYSTEM LIGHT PANEL

STRAIGHT-ACTING JACKS WITH AIR DUMP FEATURE

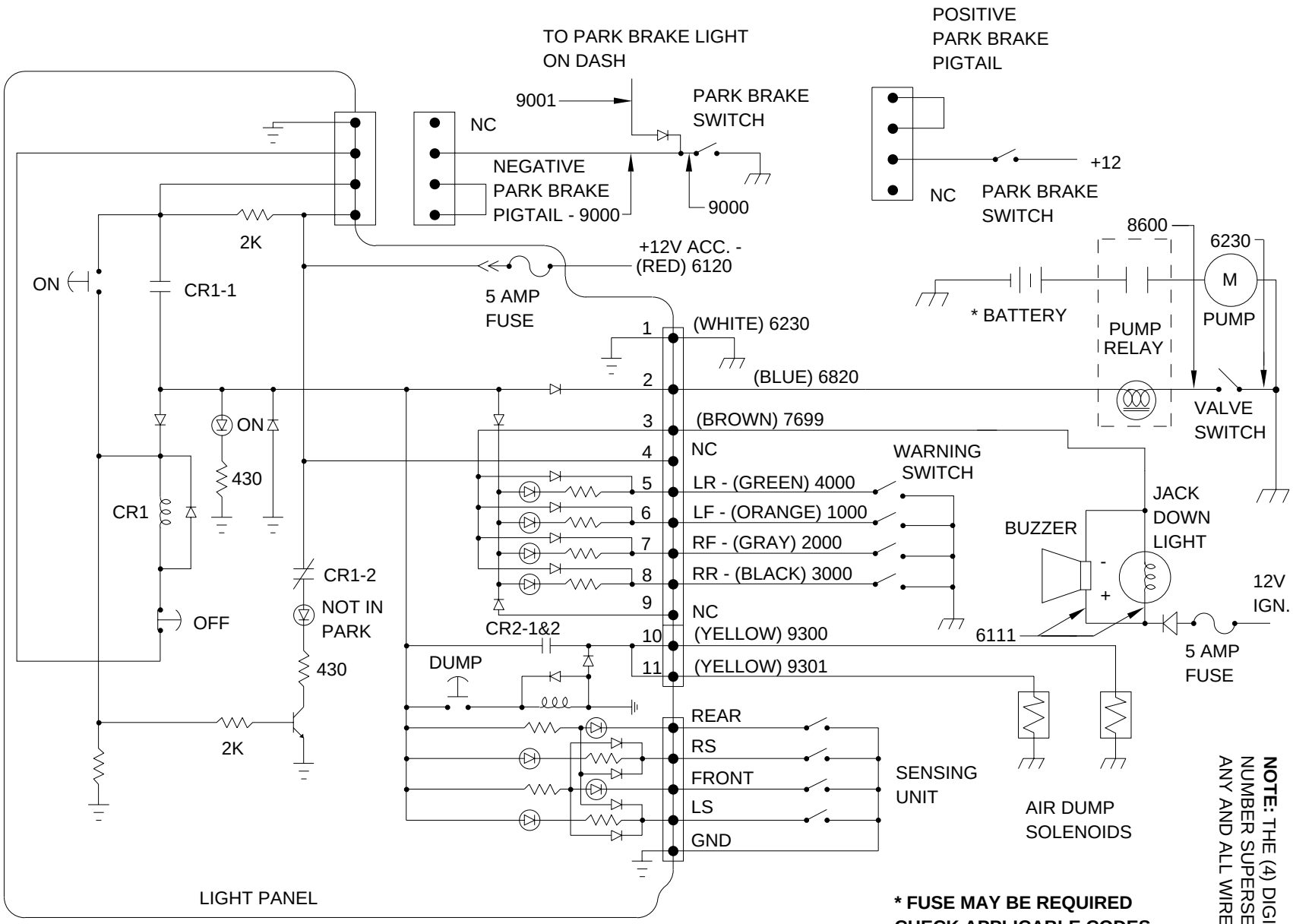

*** FUSE MAY BE REQUIRED**
CHECK APPLICABLE CODES

NOTE: THE (4) DIGIT WIRE NUMBER SUPERSEDES ANY AND ALL WIRE COLORS.