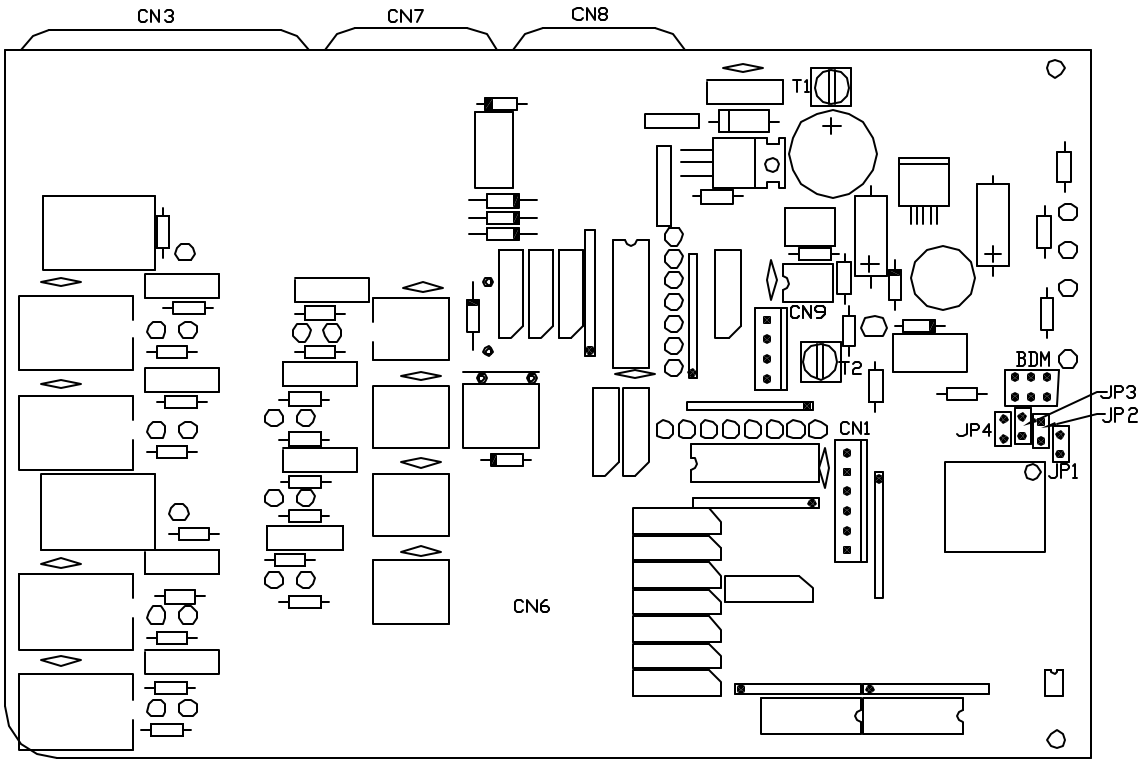

NO.	DATE	REVISION
2	23MAR07	CORRECTION
1	11AUG06	ADDED U9 FOR -1.PCB

THE INFORMATION DISCLOSED ON THIS DRAWING IS CONFIDENTIAL AND MUST NOT BE DISCLOSED OR USED IN ANY MANNER WHICH WILL BE DETRIMENTAL TO THE HWH CORPORATION

HWH

I-80 EXIT 267 SOUTH
RT 1 MOSCOW, IOWA 52760

SCALE 1:1 | DATE 08NOV05 | DRAWN BY .

PCB CAN HYD

DRAWING NUMBER MP89573 A/D

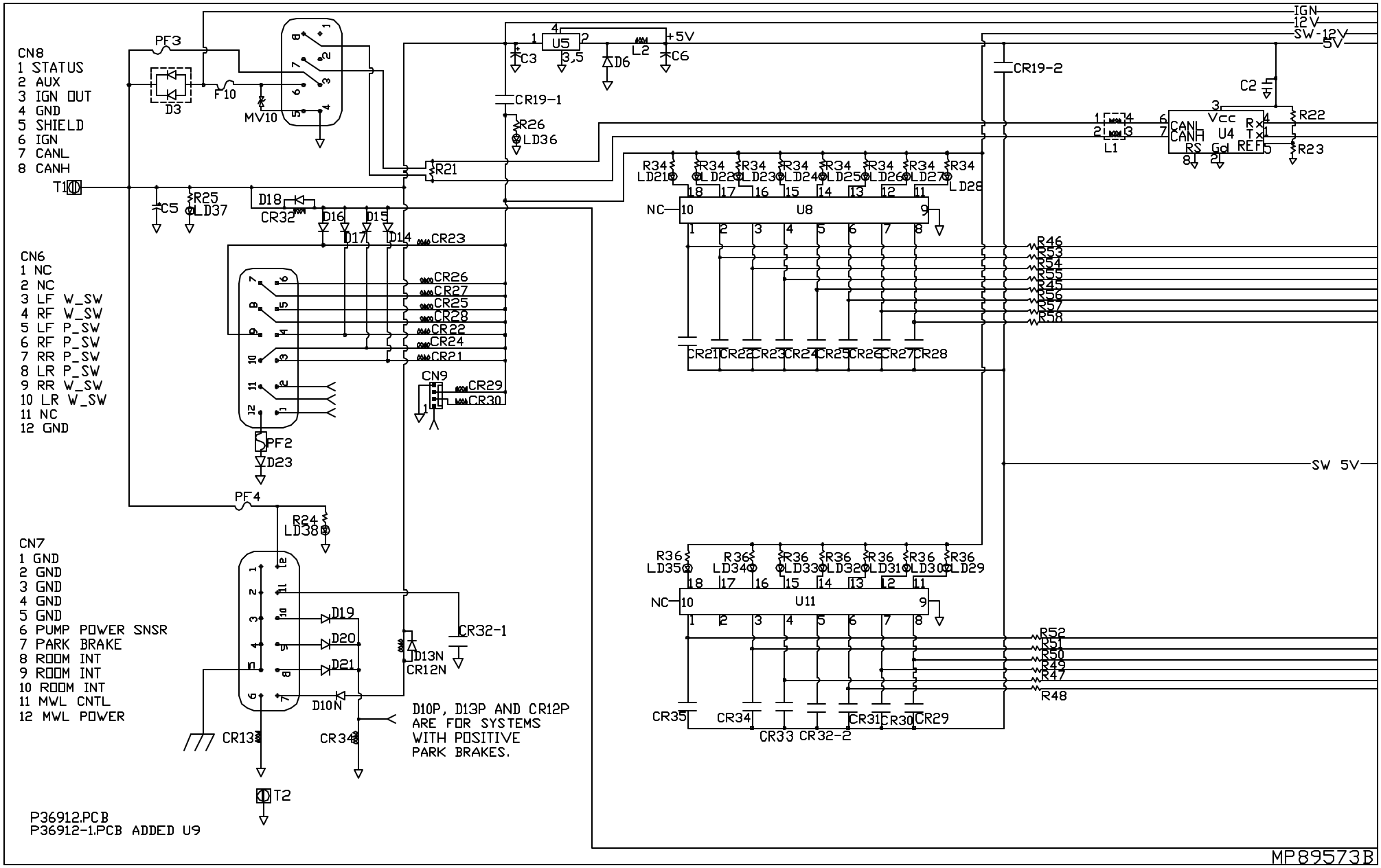
CN8
1 STATUS
2 AUX
3 IGN OUT
4 GND
5 SHIELD
6 IGN
7 CANL
8 CANH
CN6
1 NC
2 NC
3 LF W_SW
4 RF W_SW
5 LF P_SW
6 RF P_SW
7 RR P_SW
8 LR P_SW
9 RR W_SW
10 LR W_SW
11 NC
12 GND
CN7
1 GND
2 GND
3 GND
4 GND
5 GND
6 PUMP POWER SNSR
7 PARK BRAKE
8 ROOM INT
9 ROOM INT
10 ROOM INT
11 MWL CNTL
12 MWL POWER
D10P, D13P AND CR12P ARE FOR SYSTEMS WITH POSITIVE PARK BRAKES.
P36912.PCB
P36912-1.PCB ADDED U9
IGN
12V
SW-12V
5V
SW 5V
+5V
U5
U8
U11
U4
Vcc
CAN L
CAN H
RS
Gd
REF
Rx
Tx
NC
MP89573B

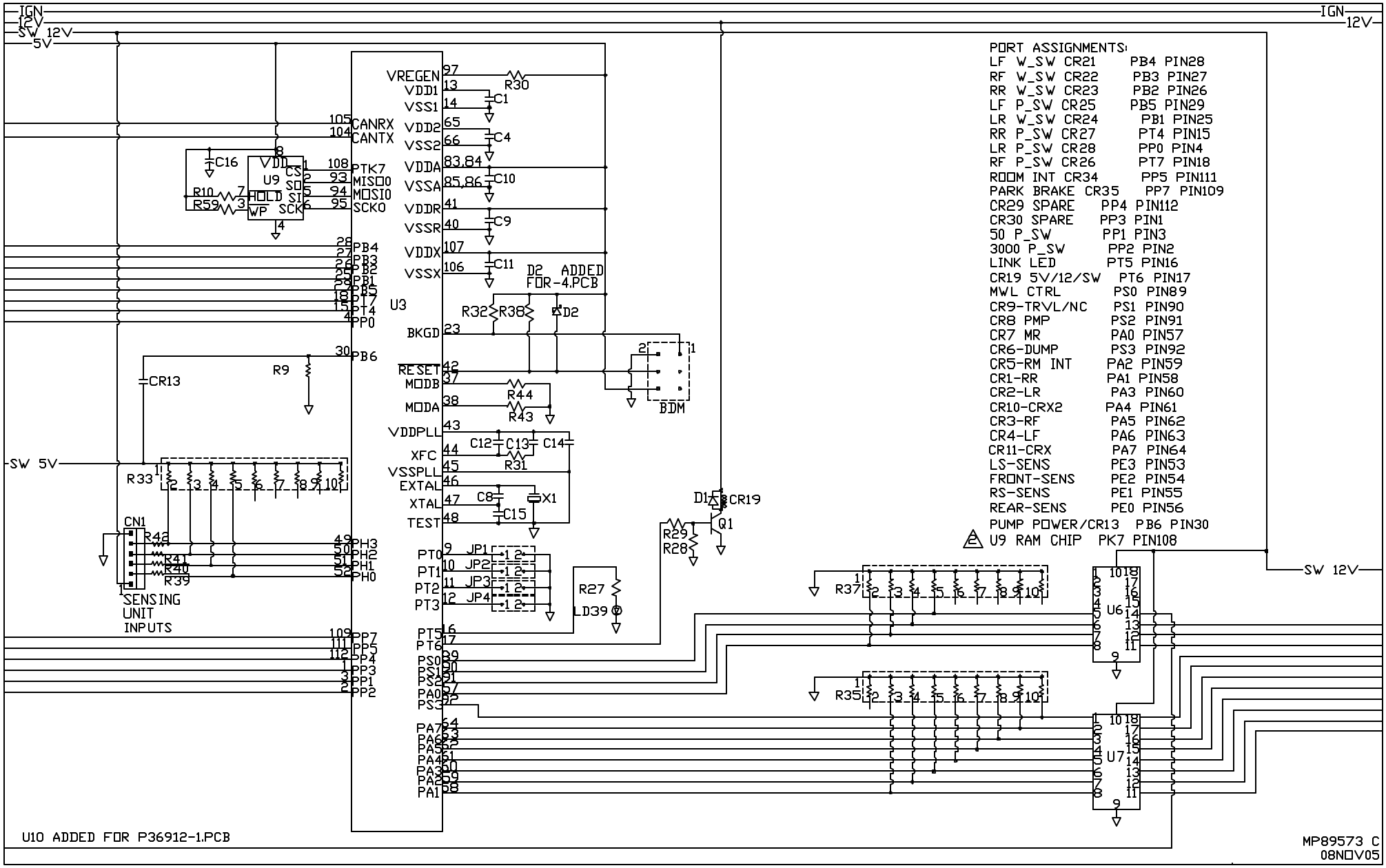
IGN
12V
SW 12V
5V
SW 5V
PORT ASSIGNMENTS:
LF W_SW CR21 PB4 PIN28
RF W_SW CR22 PB3 PIN27
RR W_SW CR23 PB2 PIN26
LF P_SW CR25 PB5 PIN29
LR W_SW CR24 PB1 PIN25
RR P_SW CR27 PT4 PIN15
LR P_SW CR28 PP0 PIN4
RF P_SW CR26 PT7 PIN18
ROOM INT CR34 PP5 PIN111
PARK BRAKE CR35 PP7 PIN109
CR29 SPARE PP4 PIN112
CR30 SPARE PP3 PIN1
50 P_SW PP1 PIN3
3000 P_SW PP2 PIN2
LINK LED PT5 PIN16
CR19 5V/12/SW PT6 PIN17
MWL CTRL PS0 PIN89
CR9-TRVL/NC PS1 PIN90
CR8 PMP PS2 PIN91
CR7 MR PA0 PIN57
CR6-DUMP PS3 PIN92
CR5-RM INT PA2 PIN59
CR1-RR PA1 PIN58
CR2-LR PA3 PIN60
CR10-CRX2 PA4 PIN61
CR3-RF PA5 PIN62
CR4-LF PA6 PIN63
CR11-CRX PA7 PIN64
LS-SENS PE3 PIN53
FRONT-SENS PE2 PIN54
RS-SENS PE1 PIN55
REAR-SENS PE0 PIN56
PUMP POWER/CR13 PB6 PIN30
U9 RAM CHIP PK7 PIN108
U3
VREGEN
VDD1
VSS1
VDD2
VSS2
VDDA
VSSA
VDDR
VSSR
VDDX
VSSX
BKGD
RESET
MODB
MODA
VDDPLL
XFC
VSSPLL
EXTAL
XTAL
TEST
CANRX
CANTX
PTK7
MISO0
MOSI0
SCK0
PB4
PB3
PB2
PB1
PB5
PT7
PT4
PP0
PB6
PH3
PH2
PH1
PH0
PT0
PT1
PT2
PT3
PT5
PT6
PS0
PS1
PS2
PA0
PS3
PA7
PA6
PA5
PA4
PA3
PA2
PA1
PP7
PP5
PP4
PP3
PP1
PP2
D2 ADDED FOR-4.PCB
BDM
SENSING UNIT INPUTS
U10 ADDED FOR P36912-1.PCB
MP89573 C
08NOV05

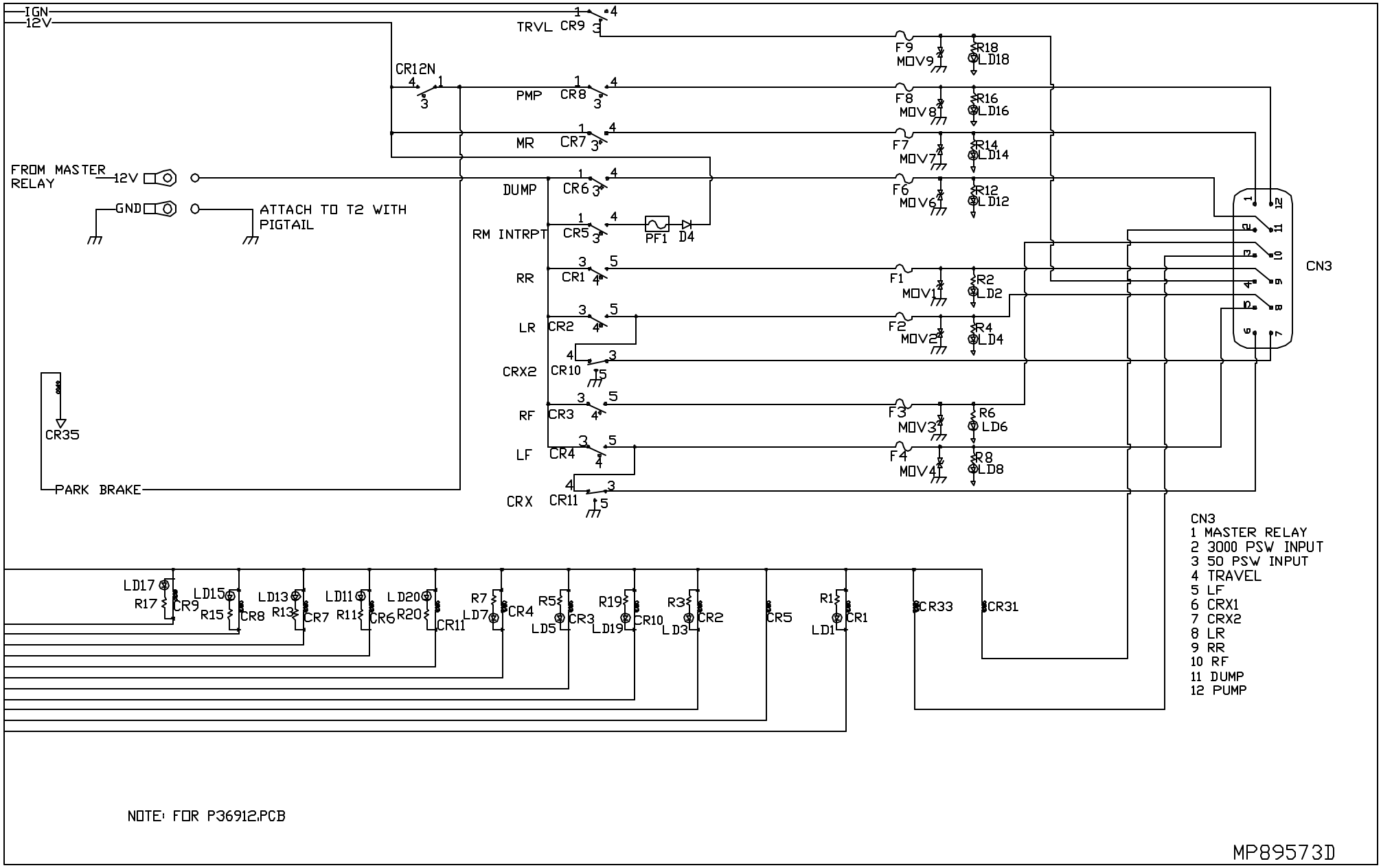
IGN
12V
TRVL CR9
CR12N
PMP CR8
MR CR7
DUMP CR6
RM INTRPT CR5
PF1
D4
RR CR1
LR CR2
CRX2 CR10
RF CR3
LF CR4
CRX CR11
F9 MOV9 R18 LD18
F8 MOV8 R16 LD16
F7 MOV7 R14 LD14
F6 MOV6 R12 LD12
F1 MOV1 R2 LD2
F2 MOV2 R4 LD4
F3 MOV3 R6 LD6
F4 MOV4 R8 LD8
FROM MASTER RELAY
12V
GND
ATTACH TO T2 WITH PIGTAIL
CR35
PARK BRAKE
CN3
LD17 R17 CR9
LD15 R15 CR8
LD13 R13 CR7
LD11 R11 CR6
LD20 R20 CR11
R7 LD7 CR4
R5 LD5 CR3
R19 LD19 CR10
R3 LD3 CR2
CR5
R1 LD1 CR1
CR33
CR31
CN3
1 MASTER RELAY
2 3000 PSW INPUT
3 50 PSW INPUT
4 TRAVEL
5 LF
6 CRX1
7 CRX2
8 LR
9 RR
10 RF
11 DUMP
12 PUMP
NOTE: FOR P36912.PCB
MP89573D